UNCLASSIFIED

AD NUMBER

AD408201

NEW LIMITATION CHANGE

TO

Approved for public release, distribution unlimited

FROM

Distribution authorized to U.S. Gov't. agencies and their contractors; Administrative/Operational Use; MAY 1963. Other requests shall be referred to Assistant Secretary of Defense [Comptroller], Washington, DC 20301.

AUTHORITY

OASD per DTIC Form 55

THIS PAGE IS UNCLASSIFIED

UNCLASSIFIED

AD 408 201

DEFENSE DOCUMENTATION CENTER

FOR

SCIENTIFIC AND TECHNICAL INFORMATION

CAMERON STATION, ALEXANDRIA, VIRGINIA

UNCLASSIFIED

NOTICE: When government or other drawings, specifications or other data are used for any purpose other than in connection with a definitely related government procurement operation, the U. S. Government thereby incurs no responsibility, nor any obligation whatsoever; and the fact that the Government may have formulated, furnished, or in any way supplied the said drawings, specifications, or other data is not to be regarded by implication or otherwise as in any manner licensing the holder or any other person or corporation, or conveying any rights or permission to manufacture, use or sell any patented invention that may in any way be related thereto.

408201

MEMORANDUM
RM-3679-ASDC
MAY 1963

CATALOGED BY DDC
AS AD No.

ARMY COST MODEL OPERATORS' MANUAL

J. J. Pringle and P. R. McClenon

408 201

DDC
JUL 1 1963

PREPARED FOR:
THE OFFICE OF THE ASSISTANT SECRETARY
OF DEFENSE/COMPTROLLER

The RAND Corporation
SANTA MONICA • CALIFORNIA

NO. OTS

FOR OFFICIAL USE ONLY

MEMORANDUM
RM-3679-ASDC
MAY 1963

ARMY COST MODEL OPERATORS' MANUAL

J. J. Pringle and P. R. McClenon

This research is sponsored by the Department of Defense under Contract SD-83, monitored by the Assistant Secretary of Defense (Comptroller). Views or conclusions contained in this Memorandum should not be interpreted as representing the official opinion or policy of the Department of Defense.

The RAND Corporation
1700 MAIN ST • SANTA MONICA • CALIFORNIA

FOR OFFICIAL USE ONLY

PREFACE

This Memorandum is one in a series of publications documenting the Army Cost Model developed by RAND on behalf of the Programming Office of the Office of the Assistant Secretary of Defense (Comptroller). The memorandum is presented as a manual of operating instructions directed toward those who will be responsible for the use and operation of the cost model.

The manual covers the more procedural aspects of model operation and updating. For a more generalized discussion of the model and its uses, see the following related publications:

Grosse, R. N., Army Cost Model, The RAND Corporation, RM-3446-ASDC. December 1962.

Grosse, R. N., and A. Proschan, Uses of Automated Force Cost Models, The RAND Corporation, RM-3608-ASDC, April, 1963.

Meltsner, A. J., Information Requirement Problems for Army Force Structure Cost Analysis, The RAND Corporation, RM-3468-ASDC, February 1963.

Other publications in the series include memoranda on data sources and analysis, future research, model structure and flow, and a programmers' reference manual. These are currently under preparation.

ACKNOWLEDGMENTS

This manual was written by members of the RAND Bethesda Cost Analysis Group, with the two principal authors acting as coordinators and editors as well as contributors to the draft. A. J. Meltsner provided overall advice and guidance. H. R. Swaine provided editorial assistance as well as contributions to the original draft. B. Steinbock and R. S. Feldman wrote several sections of the draft and assisted in later revisions. Contributions were also made by H. Boissevain and G. P. Vore. R. A. Martyn and E. Pearman acted as editors in the final review.

SUMMARY

This manual provides operating instructions for the Army Cost Model developed by RAND on behalf of the Office of the Assistant Secretary of Defense (Comptroller). The manual is directed toward those individuals who will operate the cost model and others with an interest in its use.

The manual is one in a series of publications designed to aid in transferring the capability to operate the Army Cost Model from RAND to other organizations. It covers only the more procedural aspects of model operation and updating. Use of the manual requires, on the part of the cost model operator, an intimate familiarity with all aspects of the model. The manual therefore cannot be used in isolation; it must be used in conjunction with other publications in the series covering data sources and analysis, future research, and model structure and flow.

The manual is designed as a "handbook" to provide ready reference to suggested operating procedures. It assumes a familiarity on the part of the model operator with force structure cost analysis, with automated models, and with Army forces and methods of operation. The manual is designed only to familiarize the operator with procedures peculiar to the Army Cost Model. It will not supply the operator with the insight, judgment, imagination, and skill in the techniques of force structure cost analysis which are required.

In addition, this manual is not adequate as a substitute for a training program in model operation. An intensive training program will be required for all model operators, with this manual used as reference material.

Chapters 1 and 2 provide a general introduction to the use of the model and to procedures for operating it. The remainder of the manual is organized by task, with each chapter covering different operations likely to be required of the operator. Chapters 3 through 9 cover the more important types of costing problems likely to be encountered by the operators of the model in costing alternative forces. Chapters 10 through 12 cover tasks not classed as costing problems but which will be required in operating and maintaining the model. Chapter 13 covers procedures for the preparation of input data and is placed at the end because the level of detail presented is not required for users of the manual outside the immediate group responsible for model operation.

CONTENTS

PREFACE iii

ACKNOWLEDGMENTS v

SUMMARY vii

LIST OF TABLES xiii

Chapter

1. USING THE MODEL 1

1.1 Applications of the Model 1
1.2 Model Outputs 2
1.3 The Model, the Operator and the User 3
1.4 Function of the Model Operator 6
1.5 Role of the User 8
1.6 Operator-User Relationships 9

2. INPUTS FOR THE MODEL 11

2.1 Model vs. Computer Program vs. Input Data 11
2.2 Input Data Coding Structure 13
2.3 Input Sheets 16
2.4 Input Listings 17

3. COSTING ALTERNATIVE FORCES 19

3.1 The Base Case 19
3.2 Specifying Alternative Forces 21

4. CHANGES TO EXISTING FORCE UNITS 26

4.1 Changes to MFU Inputs (Input Sheet I) 26
4.2 Changes to BFU Inputs (Input Sheet II) 34
4.3 Deletion of Units 38

5. ADDING NEW FORCE UNITS 40

5.1 Requirements for Adding New Units 40
5.2 Inputs for New MFU's (Input Sheet I) 41
5.3 Inputs for New BFU's (Input Sheet II) 48

6. ADDING NEW MATERIEL ITEMS 56

6.1 Items Other than Ammunition 56
6.2 Ammunition Items 63

7. OTHER MATERIEL CHANGES 66

7.1 Change in Initial Allowances (Input Sheet II) .. 66
7.2 Variation in Combat Consumption Stockage Policy 69
7.3 Change in Unit Cost (Input Sheet III C) 71
7.4 Materiel Phasing Schedules 74
7.5 Materiel Adjustment Factors 77
7.6 Deletion of Items 80

8. PERSONNEL CHANGES 83

8.1 Adding a New Personnel Type 83
8.2 Changes in Year-End Strength 86
8.3 Changes in Manning Level (Adjustment Factors) .. 87

9. DOLLAR INPUTS 93

9.1 MFU Dollar Inputs 93
9.2 EFU Dollar Inputs 96
9.3 Cost Category Codes 98

10. OUTPUT PROCEDURES 100

10.1 Types of Output Available 100
10.2 Output Aggregations 105
10.3 Evaluation of Results 116
10.4 Communication of Results 120

11. UPDATING THE DATA BASE 122

11.1 Periodic Updating 122
11.2 Inputs for Advanced Weapon Systems, Organizational Units and Hardware Items..... 124
11.3 Changing the Time Period Covered by the Model .. 128

12. DOCUMENTATION 130

12.1 Documentation of Base Case Inputs 130
12.2 Documentation of Runs of Alternative Forces 132
12.3 Documentation of Research to Upgrade the Model 133

13. INPUT PROCEDURES 135

13.1 Input Sheets 136
13.2 Input Data Coding Structure 138
13.3 Preparation of Input Sheets 169
13.4 Input Listings 173
13.5 Input Change Procedures 179
13.6 Dictionary 186
13.7 Level of Inputs: The Mission/Area 190

APPENDIX: GLOSSARY 199

REFERENCES 203

LIST OF TABLES

6.1 Inputs Required to Introduce a New Item 57

7.1 Variation of Combat Consumption Stocks 70

7.2 Materiel Adjustment Factors 78

8.1 Personnel Adjustment Factors 88

9.1 Cost Category Codes 99

10.1 Sample Output - MFU Cost and Personnel Summary 102

10.2 Sample Output - Materiel Annex 103

10.3 Mark I Cost Model Mission/Area Aggregations 106

10.4 Sample Major Force Unit Aggregations 108

11.1 Periodic Updating of Base Case Inputs - Force Structure and Personnel 125

11.2 Periodic Updating of Base Case Inputs - Materiel 126

11.3 Periodic Updating of Base Case Inputs - Force and Run Constants and Other Inputs 127

13.1 Input Sheet I - Major Force Unit Data 139

13.2 Input Sheet II - Basic Force Unit Data 140

13.3 Input Sheet III A - Materiel Phasing Schedule 141

13.4 Input Sheet III B - Materiel Data 142

13.5 Input Sheet III C - Materiel Cost Data 143

13.6 Input Sheet III D - Military Personnel Data 144

13.7 Input Sheet III E - Unspecified Unit Personnel Allocation Schedule 145

13.8 Input Sheet IV A - World Wide Data 146

13.9 Input Sheet IV B - Mission/Area Data 147

13.10 Input Sheet IV C - Deliveries to T.O.A. Schedules 148

13.11 Input Sheet V A - Program Add/Change Data 149

13.12 Input Sheet V B - Program Delete Data 150

13.13 Data Codes for Major Force Units (ID 1XXXX) 154

13.14 Data Codes for Basic Force Units (ID 2XXXX) 156

13.15 Data Codes for Materiel Phasing Schedules (ID 30XXX) 157

13.16 Data Codes for Materiel (ID 31XXX, 32XXX, and 33XXX) 158

13.17 Data Codes for Specified and Unspecified Personnel (ID 41XXX, 42XXX, 43XXX, and 40000) 159

13.18 Data Codes for Force and Run Constants (ID 00001) 160

13.19 Data Codes for Dictionary Entries (ID 00000) 161

13.20 Mark I Format Codes 162

13.21 Sample Standard Input Listing 175

13.22 Sample Inverse Input Listing 176

13.23 The Mission/Area "Tree" 192

Chapter 1

USING THE MODEL

This chapter presents an introductory discussion on the use and operation of the Army Cost Model. Model applications and outputs are discussed in the first two sections. The remainder of the chapter concerns functional relationships between those who operate the cost model, those who use its output, and the model itself. The following sections are included:

1.1 APPLICATIONS OF THE MODEL

1.2 MODEL OUTPUTS

1.3 THE MODEL, THE OPERATOR, AND THE USER

1.4 FUNCTION OF THE MODEL OPERATOR

1.4.1 Operating the Model
1.4.2 Updating the Data Base
1.4.3 Liaison with Other Groups

1.5 ROLE OF THE USER

1.6 OPERATOR-USER RELATIONSHIPS

1.1 APPLICATIONS OF THE MODEL

Automated force structure cost models have two major areas of application: (1) in the planning of alternative forces, and (2) in programming and budgeting. The planning use was first in time and more experience has been gained in using cost models for this purpose. With the introduction of the DOD programming system the potential utility of cost modeling for programming and budgeting has grown considerably.

The Mark I Army Cost Model is designed primarily to support planning, although with further research it can be refined to support programming also. The types of questions the model is designed to answer are those likely to be of interest to the planner

who is examining alternative forces. Typical problems are: changing the mix of units in the force structure; examining alternative forces incorporating advanced weapons systems; changing the weapon mix of the force; changing the rate of materiel modernization; varying stockage policy for combat consumption (mobilization reserve) stocks; and changes in manning levels. Chapters 2-8 of this manual discuss the use of the model to examine problems of this nature. There are, of course, many more problems which the model may be used to examine but which are not covered here because of limitations of time and space.

1.2 MODEL OUTPUTS

The model output is presented as estimates of resource requirements for the forces it is used to examine. These resource requirements are expressed in terms of funding levels, manpower requirements, and materiel line item requirements for each particular problem (e.g., a particular alternative force). Outputs are provided for a 10 year period and are broken down as follows:

(a) Cost Information - TOA

- by major cost category
    - R&D
    - Investment
    - Operating
- by budget appropriation account

(b) Manpower Information - Year End Strength

- Officer
- Enlisted
- Civilian

(c) Materiel Annex - By Line Item

- delivery schedules: quantities and dollars
- procurement schedules: quantities and dollars.

The output data listed above are available at a number of different summary levels. The most appropriate levels for aggregation and display can be selected by the users of the model and tailored to fit the needs of individual problems. Cost and manpower data are available at each of the levels listed below; materiel annex data are available in the Mark I model only at those levels marked with an asterisk.

LEVELS OF OUTPUT DATA

* Major Force Unit

Program Element

Mission/Area

Program

* Total Force

A more detailed treatment of output data is contained in Army Cost Model, RAND RM-3446-ASDC.(1) A list of the Major Force Units used in the Mark I model is given in a companion work to this manual, Army Cost Model Data: Part 1, Sources and Analysis.(2) Procedures used in selecting desired outputs are covered later in this manual (Chapter 10).

1.3 THE MODEL, THE OPERATOR, AND THE USER

The term "model" can be used in a general sense to refer to any generalized framework, normally involving quantitative techniques, used in solving problems. The Army Cost Model is a specialized model made up

of relationships, data, methodology, and procedures useful for rapidly estimating the costs of alternative forces and for projecting approximate budget sizes. When used to refer to the Army Cost Model, the term "model" can be construed in several ways. Regardless of the definition given the term "model," a viable cost modeling capability requires at least the following:

- computer program
- input data
- data support
- methodology and procedures
- model operators.

Throughout the material presented in this manual, a careful distinction is drawn between two principal groups connected with the model: "operators" and "users." These two groups are defined below and their roles and relationships in using the model discussed in the sections that follow (1.4 - 1.6). The term "model" is also defined for purposes of this manual, although the definition given may not agree with that used in other publications referring to cost models or to the Army Cost Model in particular. Definitions of other technical terms used in this manual are provided in a glossary in the Appendix.

(a) Model. In this Operators' Manual, the term "model" will be used to refer to the estimating methodology and logic only. "Model" will not be used to include input data.

(b) Operator(s): That group of analysts charged with operating and maintaining the model and the input data. The model operator

provides the link between the "user" of the model (defined below) and the computer. The function of the model operator is discussed in section 1.4.

(c) User(s): That individual, group, or organization desiring the services of the model, i.e., desiring to use it to solve problems and answer questions.

Conceiving an appropriate relationship between the model, the operators, and the users is vital if a successful capability to operate and utilize the model is to be established. The function and role of each is different, but all are highly interrelated. The user in effect is "the man with the problem;" the operator translates the costing problem into model inputs; the model, consisting of estimating methodology and logic, then is used to derive the estimated resource requirements of the alternative force under consideration. The role of the operators and users is discussed further in Sections 1.4 - 1.6.

The model is automated and programmed for the IBM 7090 computer. The computer performs the millions of mathematical operations required to cost an Army force. These operations are predetermined and automatic. The computer exercises no judgment and its role is merely that of an extremely rapid and efficient arithmetical "clerk." The necessary skill in cost analysis must come from the cost analysts who operate the model.

The model, then, simply accepts inputs from the operator and identifies the resultant costs. Inputs must be specific and complete.

The force to be costed must be identified in sufficient detail for costing. For convenience the force and the factors necessary for costing are generally identified by specifying the way in which the force to be costed differs from some other force already specified in complete detail. Also for convenience the model uses several levels of detail in specification; the operator may select the most appropriate level at which to make changes.

1.4 FUNCTION OF THE MODEL OPERATOR

The cost analysts who operate the cost model will perform functions which logically fall into three different but related classes: one, "operating" or using the model to price alternative forces; two, maintaining and updating the data base; and three, maintaining liaison with other groups.

1.4.1 Operating the Model

The cost model is designed to estimate the costs of alternative forces and, after further refinement, perhaps to be used as an aid to program budgeting. In using the model to obtain cost estimates, it is the function of the analysts operating the model to provide the link between the user of the data, or the party requiring the cost estimate, and the key punch operator.

In performing this function, the model operator must work very closely with the user in specifying the costing problem. He must then translate the costing problem into model inputs. After a machine run is made, the operator must evaluate the reasonableness of the results from the standpoint of cost analysis, and then transmit the results to the user. Of all the responsibilities of the operator, that of specifying

the costing problem and translating it into model inputs is by far the most difficult.

1.4.2 Updating the Data Base

As used here, the term "updating" means incorporation of current data into the model to keep existing inputs up to date, and extending the coverage of the model to include new weapons systems, organizational units, and hardware items as they are introduced into the force. It does not include research to modify the structure and methodology of the model or to incorporate new forms of input data. Research of this latter type will be referred to as upgrading.

In writing this manual, it has been assumed that "updating" and "operating" (i.e., pricing alternative forces) would be performed by the same group: the "operators" of the model. From a procedural standpoint, the two functions are very similar. For example, updating the force to a new base program requires manipulation of the same inputs as does pricing an alternative force. The similarity of the two functions suggests that they be performed by the same group and that they both be thought of as part of model operation.

1.4.3 Liaison with Other Groups

It was suggested above that model operation be construed to include updating as well as pricing alternatives. In addition to performing these functions, the operator must maintain liaison with several other groups, the most important of which are (1) the users of cost estimates generated by the model; (2) groups doing research to upgrade the model, (3) ADP personnel who maintain and operate the computer program and (4) data sources. Relationships with users are discussed in Sections 1.5 and 1.6.

Contact with groups doing research to upgrade the model is important for several reasons. First, the operators of the model should be able to suggest possible areas for improvement. Second, since the operators will have responsibility for operating the model with improvements incorporated, it will be to their advantage to stay abreast of developments in the upgrading area.

The third group, ADP personnel, actually should be considered part of the team of model operators. This group, consisting of one or two persons, is responsible for maintaining and updating the computer program and also for "running" the program. Close liaison is required between cost analysts and ADP personnel.

The fourth group with which liaison will be required consists of those persons who can furnish information needed for model inputs. Model operators will find it necessary to develop ad hoc sources and contacts in addition to making permanent arrangements to receive publications and reports on a regular, recurring basis.

1.5 ROLE OF THE USER

The user of information generated by the model has a definite part to play in the successful operation of the model. The user poses a question to the model and it is the role of the user to make certain that the question is understood. The user is responsible for providing sufficient information about the problem in which he is interested to enable the operator to translate the problem into the model inputs.

At first glance this role may seem an easy one. In actuality it is difficult because the user in many cases will not be used to

thinking and talking about the problem at the level of detail required by the model. The model prices a very specific force -- it prices that force described in the input data and makes no judgments, or interpretations.

Some of the difficulties in force specification are discussed in Chapter 3. Here it is sufficient to state that very specific force descriptions are required. A poor job of force description will result in poor answers. Furthermore, inadequate attention to force description can be dangerous and can prejudice the usefulness of the model because it may not be apparent that a poor job was done. The model in effect will do a good job of costing the wrong force. The principal danger is that the user may utilize information without realizing that it applies to a force different from the one in which he is interested.

The user, then, must be concerned with furnishing the operator with the information he needs. The user will be called upon to describe in detail the problem in which he is interested and to specify key assumptions. It is the responsibility of the operator to translate the costing problem into model inputs; the role of the user is to make certain that the operator understands the problem. Stated another way, the role of the operator is to raise the relevant questions regarding specification of the problem and the role of the user is to answer the questions raised.

1.6 OPERATOR - USER RELATIONSHIPS

The considerations raised in the two preceding sections make it clear that effective relations between the model operator and the model

user are vital for successful use of the model. The key ingredient in this relationship is communications. Both the user and the operator must be prepared to devote considerable time to joint sessions for specification of costing problems. The effectiveness of the communications between operator and user will be a major factor in determining the usefulness of the model.

Chapter 2

INPUTS FOR THE MODEL

The process of operating an automated force structure cost model is one of transforming inputs of data pertaining to force structures, materiel allowance statements, personnel strengths, cost and other estimating relationships, etc., to outputs expressing resource and cost requirements. These outputs are expressed in sufficient detail and in a form appropriate for review and analysis. A series of input sheets has been developed for convenient entry of the data required. All input sheets are designed for a common coding system, as are the major ADP programs which manipulate and process the input data.

The cost model operates upon hundreds of thousands of individual items of data, although for any given problem relatively few of these items of data must be changed. This chapter presents a generalized description of procedures for the coding and entry of input data for the model. Detailed input procedures are presented in Chapter 13. This chapter includes the following:

2.1 MODEL vs. COMPUTER PROGRAM vs. INPUT DATA

2.2 INPUT DATA CODING STRUCTURE

2.3 INPUT SHEETS

2.4 INPUT LISTINGS

2.1 MODEL vs. COMPUTER PROGRAM vs. INPUT DATA

It is very important in operating the Army Cost Model to distinguish clearly between the model, the computer program, and the input data. The computer program is simply the set of machine instructions which serve

to automate the model, which, as noted previously, is defined in this manual as the cost estimating logic and methodology exclusive of input data. The relationship between the model, the computer program, and the input data may be illustrated by an example:

Training costs are computed by using the following equation:

$$T_n = \left[\frac{Pn-1 + Pn}{2}\right] (R)(C)$$

where: T_n = Total training costs in year n

P = Year-end personnel strength

R = Personnel turnover rate

C = Training cost in $/man

In the above example, the particular values assigned for P, R, and C are input data; e.g., R might be specified as 30% for enlisted men, C $3500/man, and P the number of men in a particular unit, or in the case of training costs for a total force, the summation of personnel strengths for all units.

To continue the example, the generalized equation as written above represents the model; the specific values assigned to the parameters P, R, and C are the input data; and the computer program is the set of machine instructions telling the computer how to manipulate the input data and thereby solve the equation to obtain total training costs T_n.

The computer program thus contains no input data; it contains only the instructions for organizing and manipulating the data to compute resource requirements for the force under consideration. All parametric

values and English descriptions, representing some 100,000 - 200,000 individual items of data, are included in the input data.* The input data are coded, organized and entered using special input sheets. A generalized discussion of the coding and entering of input data follows in the next three sections.

2.2 INPUT DATA CODING STRUCTURE

All input data entered into the model are coded to identify the type of data and in some cases to provide supplementary instructions to the computer program as to how the data are to be manipulated. The coding system is simply a system of identification. The coding of each item of data must be sufficient to identify its type, its dimensions, its scale factor, and its relationship to other input data. The coding system also must be appropriate for internal use by the machine during processing to allow the program to identify, call from memory, operate on, assign, and store each data item.

Each item of data with its identifying coding information is entered by using punched cards. The punched card format includes 80 columns, of which the first 12 columns are used for the coding information, columns 13-72 for the data, and columns 73-80 for special identifying information (explained in detail in Chapters 10 and 13).

The coding information in the first 12 columns has four major components:

---

* The only exceptions to this are the titles of the 7 Programs in the DOD Programming System (e.g., General Purpose Forces) and the list of cost categories which form the stub of the output report. These items are written into the machine program.

(1) Identification Number, which identifies the thing (e.g., a force unit, a materiel item, etc.) which the data will describe. The ID number is 5 digits long and is punched into columns 1-5 of the card.

(2) Mission/Area Code, which permits the identification of data to a particular mission/area (e.g., Europe, Pacific). The mission/area code is a single alphabetic entry in column 6 of the card.

(3) Data Code, which identifies the particular characteristic which the data describe, e.g., unit cost in the case of a materiel item, pay-and-allowance factor in the case of a personnel type. The data code is a 5 digit number punched into columns 7-11 of the card.

(4) Format Code, which specifies the dimensions of the data, e.g., units, thousands, millions, etc. The format code is a single digit punched into column 12.

The coding information and data are arranged on the punched card as follows:

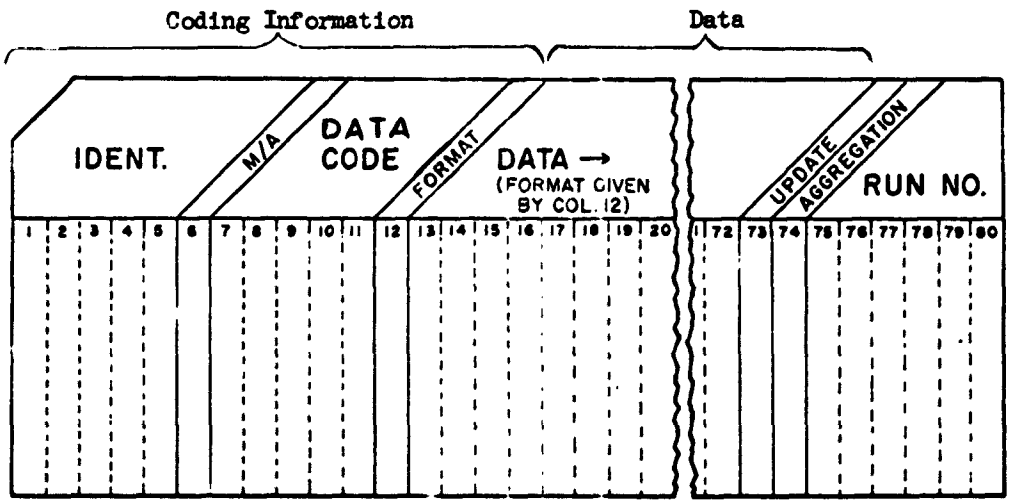

The following example will serve to illustrate the coding system. The example concerns the coding of data on the unit cost of the M-14 rifle.

(1) ID Number - identifies the thing to be described (M-14 rifle):

3 1 2 2 9

(2) Mission/Area Code - identifies the mission/area in which the data are applicable, in this case World-Wide:

A

(3) Data Code - identifies the particular characteristic (unit cost) of the thing (rifle) which the data will describe:

0 0 0 1 1

(4) Format Code - specifies the dimensions of the data, in this case dollars:

2

Assuming a fictitious unit cost of $123, the coding and data would appear as follows:

ID	M/A	Data Code	F	Data
31229	A	00011	2	00123

The preceding discussion of the model coding structure is presented primarily for familiarization to facilitate the discussion in the chapters that follow. A more detailed description of the complete coding structure is presented in Chapter 13 for reference purposes.

2.3 INPUT SHEETS

Input data for the model are entered by using a series of 12 special input sheets. Punched cards are prepared from these input sheets, and the data are then transferred from the cards to magnetic tape.

Examples of the 12 input sheets are given in Chapter 13, along with descriptions of their use. The sheets are listed below to provide background for the discussion in Chapters 2-9:

(1) Input Sheet I: Major Force Unit Data, used to enter force structure and certain cost and personnel inputs.

(2) Input Sheet II: Basic Force Unit Data, used to enter materiel and personnel specifications for each unit (TOE type data).

(3) Input Sheet III A: Materiel Phasing Schedule, data on modernization of materiel.

(4) Input Sheet III B: Materiel Data, specifications for each materiel item, e.g., maintenance float factor.

(5) Input Sheet III C: Materiel Cost Data.

(6) Input Sheet III D: Military Personnel Data, specifications for each personnel type, e.g., pay-and-allowance factor.

(7) Input Sheet III E: Unspecified Unit Personnel Allocation Schedule, inputs for estimating personnel requirements for units not detailed in the force structure.

(8) Input Sheet IV A: World-Wide Data, inputs applying to all units.

(9) Input Sheet IV B: Mission/Area Data, inputs applying to all units in a given mission/area.

(10) Input Sheet IV C: Deliveries to TOA Schedules, lag factors to translate delivery basis costs into TOA.

(11) Input Sheet V A: Program Add/Change Data, a special sheet designed for making small scale additions or changes to the input data.

(12) Input Sheet V B: Program Delete Data, a special sheet for deletion of input data.

2.4 INPUT LISTINGS

All of the input data for the model can be printed out in machine tabulations to allow examination by the analysts who operate the model. A special computer program, separate from the main model program, is available for printing out the inputs from the magnetic tape in an orderly and easily readable form.

These Input Listings contain every item of input data used in the model and are the primary "tools" used by the model operator in costing alternative forces. The operator uses Input Listings to identify and locate inputs that are to be changed in costing an alternative.

Two Input Listings are used:

(1) The Standard Input Listing, and

(2) The Inverse Input Listing.

Both Listings contain exactly the same data - only the arrangement and ordering of the data differ. A complete description of the Listings is contained in Chapter 13.

Chapter 3

COSTING ALTERNATIVE FORCES

This chapter serves as a general introduction to the more specific coverage in Chapters 4 through 9. Alternative forces to be costed using the model normally will be treated as departures from some specified base case. This chapter consists of the following sections:

3.1 THE BASE CASE
- 3.1.1 A Point of Departure
- 3.1.2 A Comparison Standard

3.2 SPECIFYING ALTERNATIVE FORCES
- 3.2.1 Need for Detailed Specification
- 3.2.2 Types of Variations in the Force
- 3.2.3 Specification by Exception

3.1 THE BASE CASE

The base case is defined in this manual as the cost model run of the force to be used as a benchmark in costing alternative forces. The most convenient base force normally will be the approved Army base program in the DOD Five-Year Force Structure and Financial Program.(3) The base case is not static; it is revised as the Five-Year Force Structure and Financial Program(3) is revised.

The distinction between the model base case and the Army base program in the Five-Year Force Structure and Financial Program(3) should be recognized. The Army base program as developed and reported in the Five-Year Force Structure and Financial Program(3) serves as a source of input information and as a comparison standard for the model base case (see Army Cost Model Data: Part 1, Sources

and Analysis[2]). The model base case in turn serves two major purposes in the operation of the model:

3.1.1 A Point of Departure

The base case serves as a point of departure in preparing inputs for costing alternative forces. A discussion of this use of the base case fits more appropriately into the next section, "Specifying Alternative Forces," and is covered in Subsection 3.2.3.

3.1.2 A Comparison Standard

The base case is used also as a standard for evaluating the costs of alternative forces. The base case represents the model run of the currently approved program, and it should be used to examine the costs of forces which represent departures from this approved program. In this respect the base case serves as a convenient vehicle for expressing the implications of alternative force considerations. The cost implications of alternative forces are compared with the base case costs to indicate increments or decrements from the base position, e.g., "Alternative A" costs X dollars more then the base case, "Alternative B" costs Y dollars less than the base case. Before using model outputs, the "operator" should compare model runs of alternative force structures with the base case and ascertain whether the differences are reasonable. He will need some experience to develop sufficient judgment to make these comparisons.

The Army Cost Model is designed primarily as a tool for use in the decision-making or planning process, although it may also find applications in program budgeting. The Mark I model is not

intended to provide an absolute costing capability; rather it is designed to provide quickly the relative cost implications of alternative forces. The cost estimating relationships developed and employed for the base case, unless changed in specifying an alternative, are applied in costing the alternative. In this manner the costs of alternatives are derived in conformity with methodologies used in the base case and represent relative cost differences because of the uniform application of cost estimating relationships.

3.2 SPECIFYING ALTERNATIVE FORCES

3.2.1 Need for Detailed Specification

As is true of cost analysis in general, the most difficult part of total force structure cost analysis is describing what is to be costed in sufficient detail to permit the application of costing relationships and factors. In the Army Cost Model, nearly all costing factors are applied to two cost generating resources: personnel and materiel. This means that the process of force specification amounts to detailing the force to be costed in terms of its time-phased requirements for personnel and materiel.

As an example of what is meant by "detailing the force," consider a request to price a force which includes one additional division over and above the base force. To say "price the force with one additional division" is not enough. It is necessary to specify what kind of division. How many people will this division have in each year that it is to be in the force? What kind of people: airborne, flight rated, electronics specialists? How

many tanks will the division have? What kind of tanks? Will they be bought new or inherited? If bought new, when is the division to get them? All of these questions, and others, must be asked and answered as part of the process of describing the force.

The description of the force preparatory to pricing it by using the cost model is accomplished by breaking the force down into a fairly large number of organizational units, identified in the model as basic force units. These basic force units, or BFU's, are in most instances battalion and company level units. Each of these BFU's then is described explicitly in terms of its equipment and personnel requirements. To the analyst attempting to detail a force, these BFU's can be considered as "packages" of men and equipment which may be combined in a variety of ways to produce the force to be costed.

The operator of the Mark I model must assist the user by suggesting reasonable specifications, by pointing out the implications of the user's questions, and by translating the force specifications into terms appropriate for model use. The user should not be expected to understand such terms as "basic force unit," "lag factor," "unspecified PEMA," and the like. The model operator must explain model requirements in terms which are meaningful to the person requesting a cost estimate from the model.

3.2.2 Types of Variations in the Force

This section lists six basically different types of variations in forces as examples of the types of problems the model might be used to solve:

(a) Changes in the projected number and/or type of basic force units. This involves a change in the projected number or type of basic force units shown on Input Sheet I. One example would be the doubling of the number of tank battalions in Europe. Another example would be the substitution of a missile BFU for an artillery BFU on Input Sheet I.

Changing the number of units is sometimes mistakenly thought of as the only way to introduce variations between alternative force structures. The limitation of this type of change is that it cannot be used to change the assumptions on the equipage and manning levels entered into the model for the base case. Changes in basic force units are discussed in Chapters 4 and 5.

(b) Changes in the equipage level of the basic force units. This involves a change in the amount of equipment allocated to the units. This type of change could be either an increase in the number of weapons in a particular unit or a rise in the general equipage level of all units in the Army.

A change in the equipage level can also be accomplished by adjusting the stockage levels. For example, ammunition stocks might be increased. Chapters 6 and 7 discuss materiel changes.

(c) Changes in the type of equipment. The selection of major items of materiel shown in the base case may be changed for an alternative force structure. Addition of new materiel items is discussed in Chapter 6.

(d) Variations in the phasing-in of new items. This involves a change in the speed with which new materiel items are phased into the force. An example would be the shortening of the delivery period of the M-14 rifle by one year. Changes in materiel phasing are discussed in Chapter 7.

(e) Changes in the manning levels. An example of this type of change would be an increase of 10 percent in the manning level of all infantry divisions. The adjustments can be made for each type of personnel by using the personnel adjustment factors. Chapter 8 discusses changes in manning level.

(f) Changes in personnel types. Changes in pay factors or training costs might require changes in personnel types treated in the model. The effect of a change in pay can be calculated by entering new pay and allowance factors for each type of personnel. Variations in training can be entered by changing the turnover rate which determines the annual number of new personnel to be trained or by varying the personnel training cost. Changes of this nature are discussed in Chapter 8.

3.2.3 Specification by Exception

Alternative forces are specified on an exception basis. Since the base case inputs are used as the departure point, attention may be directed toward only those characteristics of the alternative force which are different from the base force. Inputs must be prepared to specify only those characteristics which differ.

These inputs are prepared as changes or additions to the corresponding base case inputs. For all other characteristics of the alternative force, the base case inputs are used. In nearly all cases the number of inputs which must be changed will be very small in relation to the total inputs. The majority of the inputs required for costing an alternative force, therefore, are prepared already. This method of specification by exception greatly speeds the process of costing alternative forces.

The use of the base case as the point of departure does not require necessarily that inputs for an alternative force be prepared as changes or additions to base case inputs. Inputs for a particular alternative, if desired, may be prepared by adding to or changing the inputs for another alternative, whose inputs in turn had been prepared by adding to and changing those for the base case.

Chapter 4

CHANGES TO EXISTING FORCE UNITS

Changes to the existing force may be required either as part of specifying an alternative force to be costed or as part of periodic updating of the base case force. The term "existing force" means those units for which inputs are available and which appear in the base case force structure.

Three general types of changes are possible:

(a) Changes to force structure

(b) Changes to per unit personnel or materiel

(c) Changes to cost inputs.

These changes are discussed in the following sections according to the input sheet on which they are made:

4.1 CHANGES TO MFU INPUTS (INPUT SHEET I)
- 4.1.1 Force Structure
- 4.1.2 Manning/Equipage Levels
- 4.1.3 Other MFU Inputs

4.2 CHANGES TO BFU INPUTS (INPUT SHEET II)
- 4.2.1 Year-End Materiel/Personnel
- 4.2.2 Manning/Equipage Levels
- 4.2.3 Other BFU Inputs

4.3 DELETION OF UNITS
- 4.3.1 Deletion of Major Force Units
- 4.3.2 Deletion of Basic Force Units

4.1 CHANGES TO MFU INPUTS (INPUT SHEET I)

Input Sheet I is used to specify MFU inputs. Three types of data are included: force structure; manning/equipage levels; and other inputs such as cost or personnel thruputs. Changes to these three types of inputs are discussed separately in the following sections.

4.1.1 Force Structure

Major force units are made up of subordinate units known as basic force units. The force structure specification is made on Input Sheet I by specifying, for each MFU, the quantity of each component BFU over time. Force structure changes are made by changing the quantities of component BFU's.

The major problem that will be faced by the "operator" in making force structure changes is that of translating changes stated in general terms by the "user" into changes to specific MFU's. From the operator's viewpoint, the optimum situation is that in which the user identifies the particular MFU's to be changed and specifies the changes to the component BFU's. In most cases, however, the user probably will specify the change as "infantry divisions in Pacific" or "brigades in Alaska," and leave it to the operator to identify the appropriate MFU's. This identification may be made most easily in either the title card listing in the Inverse Input Listing or in the section of the Army Cost Model Data: Part 1, Sources and Analysis (2) which shows which MFU's compose each Program Element.

The next step requires specification of the revised force structure in terms of the quantity of each component BFU over time. The number of BFU's always is stated as the total for the Program Element. To illustrate, if an infantry division contains two Howitzer Battalions TOE 6-355E, and there are four infantry divisions in the Pacific, then the MFU in the Pacific which contains the

Howitzer Battalions will show eight such Battalions. To change from four divisions to five, the quantity of the BFU (TOE 6-355E) must be changed from eight to ten.

The procedures for making force structure changes can be illustrated further by means of examples. The simplest change is encountered in those cases wherein the change to be made is stated directly in terms of the MFU, and the MFU is composed of only one type of BFU. As in all cases, the mission/areas and time periods involved should be ascertained. The new level or levels should be entered for the BFU in the appropriate fiscal years. This is illustrated in an example in which MFU 13016, INF/MEC DIV-FA BN HJ in M/A Europe (K) is increased from four to five in FY 1955 and six in FY 1956 and beyond. First, look up the base case MFU. Next, prepare a change to the data according to Section 13.5. The force structure on Input Sheet I, before the change, looks like this:

ID	MA	Data Code	F	N-1	N	N+1	N+2	N+3	...
13016	K	20280	2			4			

After the change, the force structure on the change sheet will look like this:

ID	MA	Data Code	F	N-1	N	N+1	N+2	N+3	...
13016	K	20280	2			4	5	6	

A slightly more complex change arises when a change in the number of a basic force unit in particular mission/areas is specified. The first step is to locate the BFU (by its code) in the Inverse

Input Listing. This will show all the MFU's which contain the BFU. Select the proper MFU by checking against the appropriate mission/area code. When the MFU's have been identified, proceed as above in changing the number of BFUs.

A more complex change likely to confront the model operator will stem from those occasions in which the force structure change will be given in terms of Program Elements. Since the force structure change eventually must be spelled out in terms of basic force units, the problem is to translate the Program Element specification to BFU terms.

The first step is to specify the quantitative meaning of the Program Element change specification. Program Elements are best thought of as collections of similar military organizations in a given theater. Thus the Program Element "Mechanized Divisions in Europe" is the collection of all such divisions in Europe and the number might be one, two, three or more.

Next, determine which MFU's make up the Program Element. Locate the Program Element (by mission/area) in Army Cost Model Data: Part 1, Sources and Analysis[2], Section 2.2.7. Indented under each Program Element are the titles and TOE numbers of the component MFU's. Find and record the codes of each MFU under "Major Force Unit Names" in the Inverse Input Listing.

To determine the BFU content of each of the component MFU's, look under the appropriate MFU heading in "Major Force Unit Data"

of the Standard Input Listing. The number of each BFU contained in the MFU normally should be evenly divisible by the number of organizational units making up the Program Element (exceptions are "tailored" forces). To determine the number of BFU's per unit of Program Element, divide the force structure level of the latter into the quantity of each BFU for the appropriate time period in the base case MFU. To determine the new BFU level, multiply the previous result by the new Program Element level. The following example will serve to illustrate this process.

A change is specified as an increase of one Mechanized Division in Europe in "General Purpose Forces," Program III, in FY 1966. This is identified with the model's Infantry/Mechanized Divisions. A check with the Five-Year Force Structure (3) shows (hypothetically) that there are four such divisions in Europe in that year. The major force unit components of the Program Element are identified in Army Cost Model Data: Part 1, Sources and Analysis (2) and are listed:

INF BATTLE GROUP/INF BN MECH
⋮
FA BN HOW 105/155 SP
⋮
OTHER DIVISIONAL UNITS

Next the BFU components and their force levels are found by looking up each of the MFU's under the "Major Force Unit Data" tab of the Standard Input Listing. One will be FA BN HOW 105/155 SP and the data might look like this:

BEFORE:	Data Code	N-1	N	N+1	(1965) N+2	(1966) N+3
FA BN HOW 105/155 SP 6-125D	20250	8	8	0		
FA BN HOW 105 SP 6-345E	20350		6	9	12	
FA BN HOW 155/8" SP 6-355E	20360		4	6	8	

In 1966, the year the change is to be introduced, it is seen that the numbers of FA BN HOW 105 SP and FA BN HOW 155/8" SP are 12 and 8 respectively. These quantities are divided by 4, the number of divisions in the Program Element, and yield 3 and 2 BFU's, respectively, per unit Program Element. These factors are multiplied by 5, the new number of divisions in the Program Element (4 in base case plus 1 stipulated increase). The force structure changes would look like the following:

Line No.	ID	M/A	Data Code	F	N-1	N	N+1	N+2	N+3
1	13010	K	20350	2			6	9	15
2	13010	K	20360	2			4	6	10
3									

Note that no entry is made for BFU 20250 because no change to it is required.

The force structure changes discussed in this section are made on either Input Sheet V A or Input Sheet I in the blank sections with no pre-printed code. The section on Input Sheet I entitled "Force Structure," with pre-printed codes 00013, 00029, and 00045, cannot be used to make these changes. These "Force Structure" entries in the blocks with the pre-printed codes are used for notational

entries only ; entries in these spaces have no operational significance and do not affect the computation of costs or other output. These notational entries in the "Force Structure" block are used to provide a statement of the force structure in the output. The entries appear in the output exactly as entered on Input Sheet I. When changes are made in the "operational" force structure corresponding changes should be made in the "notational" force structure lines.

4.1.2 Manning /Equipage Levels

A second type of change which can be made to existing units in the force is a change in the over-all levels of manning and equipage in a particular unit, in an area, or in the whole force. Examples of such changes are:

(a) Equip all units in Europe at 120% of TOE

(b) Man all units in Alaska at 50% of TOE

(c) Reduce officer manning in Pacific by 10% and enlisted manning by 5%.

Changes of these types might be specified as part of an alternative force to be costed. Such changes cannot be made as "force structure changes" as described in the previous section. They could be made by changing all personnel and materiel inputs by an appropriate amount. However, the easiest way is to use the materiel and personnel adjustment factors provided for this type of change.

The adjustment factors appear on Input Sheet I. Using these factors, it is a simple matter to change manning or equipage levels for a particular MFU, an area, or an entire force. Manipulation of these factors for a particular MFU changes only the manning or equipage levels for that MFU. In order to change the levels for an area or an entire force, it is necessary to change the adjustment factors on all MFU input sheets for the area or the force.

As can be seen on Input Sheet I, adjustment factors are available for the following:

Personnel - Officer
Personnel - Enlisted
Personnel - Civilian
Equipment
Related Equipment
Replacement/Consumption
Training Consumption

The techniques and procedures for using these adjustment factors are discussed elsewhere in this manual: materiel adjustment factors in Section 7.5 and personnel adjustment factors in Section 8.3.

In adjusting manning and equipage levels, the operator should always consider indirect affects. For example, if manning in Europe is to be reduced 10%, does this mean that flight personnel are to be reduced without a reduction in aircraft? Does a change in manning level imply a corresponding change in rifles? - in trucks? These kinds of questions should always be explored by the operator with the user.

4.1.3 Other MFU Inputs

Other MFU inputs include personnel and dollar thruputs and, in some cases, materiel initial allowances (e.g., MFU "Unallocated - Program III" and MFU "Program V Materiel").

Changes to thruputs normally will not be required as part of pricing alternative forces since thruputs normally are not sensitive to force changes. However, thruputs will have to be changed as part of the updating process (see Chapter 11 for further discussion of updating). When a thruput is to be changed, the first step is to locate the MFU's for which it is entered using the Inverse Input Listing. The data may then be changed as outlined in Section 13.5.

Initial allowances for materiel for MFUs may be changed in a manner similar to that used for BFUs (Section 4.2.1).

4.2 CHANGES TO BFU INPUTS (INPUT SHEET II)

Changes to BFU inputs will be required frequently in pricing alternative forces. Such changes may be required in order to tailor existing BFUs to the costing problem under consideration. All BFU inputs are entered on Input Sheet II.

4.2.1 Year-End Materiel/Personnel

Changing BFU materiel or personnel inputs in some ways is analagous to changing the TOE for the unit. Changes may be of the following types:

(a) Changing the initial allowances of any materiel item for the BFU.

(b) Changing the year-end strength for any personnel type for the BFU.

(c) Adding a new materiel item or personnel type to the BFU.

(d) Deleting a materiel item or a personnel type.

In making changes of the above types, the first step is to locate the BFU under consideration in the Standard Input Listing. This listing presents all relevant inputs for the BFU.

If a materiel initial allowance is to be changed, the next step is to locate the item in the listing. The change is then made according to procedures in Section 13.5. Personnel end-strengths are changed in a similar manner.

Addition of a materiel item or personnel type not previously included for a particular BFU may require several steps. In the case of a materiel item, two conditions are possible:

(a) The item is already included in the model but new to the BFU under consideration.

(b) The item is a new one not previously included in any unit in the model.

In case (a), the first step is to locate the item in the list of materiel item titles in the Inverse Input Listing. In this listing, the identification (ID) number for the item may be found. This ID number is used as the data code for the item when it is entered on Input Sheet II (see Section 13.2 on coding structure).

After determining the code number, the item may be assigned to the BFU under consideration. In most cases, the "generic" code for the item -- 30XXX -- will be used so that a phasing schedule will be applied to the item. If no phasing schedule is to be applied to the item for that particular BFU, the item may be entered

with the code 31XXX. The entry should be prepared as described in Section 13.5. To illustrate, the data would appear as follows to add 8 Iroquois Helicopters to BFU 20280 in Europe, using the generic code so that a phasing schedule will be applied:

I.D.	M/A	Data Code	F	N-1	N	N+1
2 0 2 8 0	K	3 0 7 0 9	2		8	

The second case mentioned above, that of adding an entirely new materiel item not previously used by any unit in the model, is somewhat more complicated. The procedures for adding a new materiel item are discussed in Chapter 6. After these procedures have been followed, the assignment of the item to a particular BFU is made as outlined above.

Addition of a personnel type to a BFU is done in a similar manner. The same two conditions may exist as for a materiel item: (1) the personnel type is new to the BFU but not to the model; (2) the personnel type is an entirely new one. Additions of the first type are made in a manner similar to that described previously for materiel. Additions of entirely new personnel types are discussed in detail in Chapter 8.

Deletions of materiel items or personnel types, the last of the four types of changes mentioned at the beginning of this section, are discussed in Sections 13.5 and 7.6.

4.2.2 Manning/Equipage Levels

Adjustment factors are available on Input Sheet II for adjusting the manning or equipage level of a BFU. These factors are not selective; they apply to all materiel items or to all personnel types included in the BFU. For example, the "officer" adjustment factor adjusts all officers in the BFU; the "equipment" factor adjusts all equipment items.

These adjustment factors may be used when an "across the board" change to a BFU is desired and when time is a factor. The use of the adjustment factor permits the change to be made by changing one input rather than many. It also permits a return to the "base" inputs later merely by returning the adjustment factor to 1.0. The use of adjustment factors to vary manning and equipage levels is discussed in more detail in Sections 8.3 and 7.5.

4.2.3 Other BFU Inputs

All BFUs include an input for maintenance costs expressed as dollars per average unit (Code 06660). In some cases RDT&E costs or construction costs may be entered at the BFU level.

To change inputs of this type, the first step is to locate the BFU in the Standard Input Listing. The change to the data may then be made according to procedures in Section 13.5.

To add new data of this type, e.g., per unit construction cost, the first step is to determine the type of computation desired. For a dollars-per-average-unit computation, the input should be coded 06XXX; for dollars-per-incremental-unit, the code should be 07XXX

(see Sections 13.2 and 9.2 for further discussion of code assignments). The last three digits of the code are those assigned to the particular cost category involved; e.g., 660 for BP 2300 Maintenance Costs, 214 for MCA costs, etc. (see Section 9.3 for cost category codes).

After the code is established for a new BFU input of the above type, the data should be entered as described in Section 13.5.

4.3 DELETION OF UNITS

4.3.1 Deletion of Major Force Units

A major force unit can be eliminated from the specific force to be costed in a given model run without deleting it entirely from the model. To eliminate an MFU for a particular run, the operator should either change the quantities on Input Sheet I to zero or delete the data lines of that input sheet which specifies the composition of the MFU. For other alternatives the MFU then can be readily reinstated.

If a major force unit is no longer useful for specifying forces, it should be deleted completely from the model. Deletion involves two steps:

(1) Delete each line of input data for the MFU. See the Standard Input Listing and use the column 73 deletion indicator as described in Section 13.5 of this manual.

(2) Check the Inverse Input Listing for each BFU, materiel item, and dollar input which was a part of the MFU. If these inputs were not used in other MFUs, consider the appropriateness of deleting them.

4.3.2 Deletion of Basic Force Units

Basic force units are convenient aggregations of personnel, materiel, and cost factors. BFU's are used in determining the total cost of a specified force only to the extent that they are called for in the composition of the MFU's specified. Any BFU therefore can be omitted in a particular model run by not specifying it as part of any MFU. The BFU, in this case, will still remain "available" in the model input data for specification in a different alternative.

A basic force unit specification typically includes many lines of data. These BFU inputs can be maintained on the input tape without any sacrifice of computer storage capacity. In many cases it may be desirable to preserve the inputs for a BFU on the input tape even if the BFU is not being used in the current base case or alternative forces currently being priced. At such time as the BFU is no longer useful for the specification of the base case or of alternatives which reasonably can be expected to be of interest, the BFU should be deleted from the input tape. If a BFU is to be deleted, the following steps should be taken:

(1) Delete each line of input data for the BFU. See the Standard Input Listing and use the column 73 deletion indicator as described in Section 13.5 of this manual.

(2) Review, in the Inverse Input Listing, the use made in the model of each of the components which were a part of the BFU. Removal of the BFU may enable the further deletion of a personnel type or a materiel item.

Chapter 5

ADDING NEW FORCE UNITS

This chapter discusses the procedures and inputs required for adding new force units to the model. The chapter is composed of the following sections:

5.1 REQUIREMENTS FOR ADDING NEW UNITS

5.2 INPUTS FOR NEW MFU'S (INPUT SHEET I)
- 5.2.1 MFU Definition
- 5.2.2 Preparation of MFU Inputs
- 5.2.3 Manning/Equipage Levels
- 5.2.4 Other MFU Inputs

5.3 INPUTS FOR NEW BFU'S (INPUT SHEET II)
- 5.3.1 BFU Definition
- 5.3.2 Personnel Inputs
- 5.3.3 Materiel Inputs
- 5.3.4 Maintenance Costs
- 5.3.5 Construction Costs
- 5.3.6 Manning/Equipage Levels
- 5.3.7 Other BFU Inputs

5.1 REQUIREMENTS FOR ADDING NEW UNITS

New base cases and alternative force structures to be costed often may involve force units which have not appeared previously in the cost model runs. Therefore, alternative forces and new base cases must be defined carefully and clearly in terms of both basic force units and major force units. Such changes may be net additions to the force, substitutions of one unit for another, or reorganizations of existing units. All of these changes require essentially the same type of information and procedures. Changes which are essentially quantitative, and qualitative changes which are to be made within units already in the force, are excluded from this chapter because they have been discussed in Chapter 4.

It is not always clear what a change will entail. A change which is essentially a qualitative change in forces, for example at the division level, may resolve into a simpler quantitative change at the basic force unit level. If the necessary basic force units already exist for the mission/area involved, changes may be accomplished by the creation of new major force units alone.

For example, an Army division could be reorganized so that it is qualitatively different from other divisions, in that artillery units are removed and missile units are substituted in their place. The new missile unit BFU's may be identical to other missile unit BFU's already in the force for that mission/area. If so, the problem is a simple and straightforward quantitative reshuffling of BFU's. However, new MFU's must be created in order to display the changes and the resulting cost differences. This involves naming the new MFU, coding it and specifying the quantity, by code number, of the existing BFU's used to build up the new MFU.

The operator of the cost model should examine both the basic force unit and the major force unit levels when making any changes, however simple, to the force.

5.2 INPUTS FOR NEW MFU'S (INPUT SHEET I)

5.2.1 MFU Definition

An artificial unit called major force unit was created for model use. Most major force units in the combat programs are composed of one or more basic force units. A basic force unit which is either a combat maneuver unit or which has significant materiel

requirements also becomes a major force unit. If a basic force unit does not meet either of the preceding criteria it should be combined with other basic force units to form a "composite" major force unit. An example of the latter is the group of major force units containing "Other Divisional Units" in their titles. These MFU's were designed to aggregate such divisional support basic force units as Medical, Ordnance, Signal and Quartermaster battalions.

Major force units were also designed for handling the thruput data of Programs II through VII. These MFU's are created on the basis of the functional nature of the Program Elements, and the names of the MFU's indicate the nature of what is contained in them. These MFU's ordinarily do not enter into system analysis and at this stage of model development few of them are affected by force changes. They are entered in the model for completeness and should be reviewed whenever the base case is updated.

The operator must keep in mind that any unit which is desired for display or analysis must appear as a separate MFU since only the costs of the MFU's are printed in the output. The combination of two or more BFU's into one MFU merges their costs and their separate identities are lost. Also, the operator must remember that the new major force unit itself must be defined in terms of basic force units. If existing basic force units can be used, the new organization can be added using only Input Sheet I.

If new basic force units are required, the operator has considerable latitude in their creation. Having received the requirement

for adding a wholly new major force unit, it is up to the operator to determine its structure. He may create a single basic force unit for the new MFU or he may elect to create several BFU's. This decision can be made only for particular circumstances and will depend to a large extent upon the flexibility desired. If the new unit is unique and is expected to appear in the force in only one configuration, one BFU probably will suffice. If, however, various combinations of component units are likely to be called for in future alternatives, or if certain component units can be expected to be associated with other major force units, then such component units should be set up as separate basic force units and the major force unit should be structured accordingly. For a more detailed discussion of basic force unit selection criteria, see the Army Cost Model Data: Part 1, Sources and Analysis,[2] Chapter 2, Section 2.1. Inputs required for new BFUs are discussed in Section 5.3 of this manual.

5.2.2 Preparation of MFU Inputs

Though the user receives the model output information in terms of major force units, the force structure is manipulated by adjusting the fiscal year-end count of tne basic force units within each mission/area. Thus the BFU's are the actual units which are phased into and out of the force over time.

Eor each new MFU added to the force, an Input Sheet I must be filled out for each mission/area where this MFU is to appear. The new MFU then will be defined in terms of its component BFU's on the

same Input Sheet I. The actual procedure for filling out Input Sheet I for a new MFU is as follows:

(a) Codes: see Section 13.2 for instructions for all codes on input sheets.

(b) Title Line: fill in the name of the major force unit, showing the parent unit name (if any) and the component basic force unit name or names. For example: INF/MECH DIV (Parent Unit Name) - FA HOW 105/155 SP, 6-125D/6-345E/ 6-355E (Basic Force Unit Names).

(d) "Force Structure:" The "Force Structure" lines are for notational entries which appear in the output. Ordinarily, they show the total number of basic force units contained in an MFU without regard to the kind of BFU. For MFU's with the words "Other Divisional Units" in their titles, the numbers shown on the "Force Structure" line represent the number of "sets" of division support. Thus, if there are three identical divisions in a given mission/area, there are three "sets" of "Other Divisional Units," one set contained within each division. The "Force Structure" lines do not have operational significance in the model. However, it is very important that these entries be correct and in agreement with the "operational" force structure. Since these entries are the only force structure that the user sees, it would be very misleading to make a change in the number of basic force units without a corresponding change in the notational entries on the "Force Structure" lines. The entries on the "Force Structure" lines are printed in the output and should

reflect the MFU composition.

(e) Comments: This section is to be used as its name implies. Any peculiarities, deviations, or special information can be conveniently conveyed to the user by writing the information in the spaces provided. This information will appear in the model printout on the particular MFU page.

(f) BFU Listing and Force Structure: The blank lines below the "Comments" section on Input Sheet I are for the entry of the basic force unit names, codes, and quantities. The names of the BFU's are not key punched and therefore do not enter the model routines; only the codes and quantities are used. The names are helpful in checking inputs and should be written out until the operator becomes familiar enough with the codes to identify units by code numbers alone. Changes in the number or in the time-phasing of the basic force units in the force are accomplished by changing the numbers shown on these lines. The quantity of each BFU for each fiscal year shows the total number of this BFU for that MFU in a given mission/area. For example, if there were three infantry divisions making up one Program Element in a given mission/area and each infantry division had one tank battalion identical to the other two tank battalions, a major force unit would be created for these units. Its title might appear as "Infantry Divisions - M-60 Tank Battalions." The composition of this MFU would be BFU's called "M-60 Tank Battalion" and the quantity of BFU's entered would be three, one for each of the infantry

divisions in that particular mission/area. If each division contained two of these tank battalions, the quantity of BFU's would be six (3 X 2).

5.2.3 Manning/Equipage Levels

The adjustment factors for personnel and equipment which appear at the bottom of Input Sheet I were briefly discussed in Chapter 4, and are taken up again in Section 7.5, "Materiel Adjustment Factors," and in Section 8.3, "Changes in Manning Levels." Here it will be sufficient to note two things about the adjustment factors. One, the adjustment factors entered on Input Sheet I govern the entire MFU and all of the component BFU's of the MFU. There can be no selection as to which units are adjusted; for example, if an MFU is adjusted for officer personnel, all units of the MFU are adjusted for officer personnel by the same factor.

Two, ordinarily a new unit added to the force will be entered at a "normal" level of manning and equipment. Therefore, the adjustment factors section will remain blank for most new units and the model program automatically will enter the adjustment factor of 1.0. Nothing prevents the operator from entering a new unit with an adjustment of equipment and/or personnel upward or downward but this should be done only with the explicit understanding of the user that the unit has been adjusted and is therefore no longer a "normal" unit.

5.2.4 Other MFU Inputs

If the operator has cost data which are to be associated with a major force unit but which do not involve machine calculations,

the dollar costs can be entered on Input Sheet I as a thruput. Only items which are concerned with the MFU as a whole should be entered in this fashion. If the costs can be associated with the BFU's which make up the MFU, then such costs should be entered as a part of the BFU inputs. Then, if the BFU is shifted at a later time, the costs will be carried with it. Two examples may clarify this.

Overhaul and maintenance costs (BP 2300) could be computed on a dollars per MFU basis and entered as a thruput on Input Sheet I. However, whenever a BFU was shifted into or out of that MFU a new maintenance cost would have to be calculated. If, instead, the maintenance costs were calculated on a BFU basis and entered on the BFU Input Sheet II, the maintenance costs would be carried along as BFU's were shifted into and out of MFU's, and no dislocations would occur.

On the other hand, suppose that a particular construction project were associated with a particular MFU in a given mission/area. Such construction costs should not be tied to any of the subordinate BFU's because these BFU's would carry along this special construction cost wherever they were used or shifted. By the above supposition, this construction cost should be associated only with the particular MFU. If this MFU goes out of existence the construction requirement probably will disappear also.

As noted in Section 5.2.1, "MFU Definition," some major force units were created expressly for handling thruput data. New MFU's

may be required when a new base case is run. Essentially it is a matter of creating a new MFU for thruputs when the data cannot be fitted reasonably into existing thruput MFU's. An example of this is a new Research and Development Program Element which is not responsive to force changes but which is of sufficient interest to warrant separate display as an MFU.

5.3 INPUTS FOR NEW BFUs (INPUT SHEET II)

5.3.1 BFU Definition

A basic force unit is a device used in the cost model to facilitate the translation of plans and programs into resource requirements. The basic force unit may be organized around a major piece of equipment (e.g., an aircraft type), an installation (e.g., an air defense site), or a unit of manpower (e.g., an infantry battalion). Of course, there is considerable overlapping among these three organizing devices. The components of larger combat units, as well as smaller independent combat units, become basic force units in the cost model. The closest counterparts to BFU's in the Army are battalion size combat units. However, there are many BFU's which represent slightly larger or smaller combat units. Generally, it was neither feasible nor useful to go below battalion size units except in cases of special units, and going above the battalion level sacrificed too much detail and flexibility because of the size of the aggregation. For a more elaborate discussion of basic force units and their selection, see Chapter 2 of Army Cost Model Data: Part 1, Sources and Analysis.(2)

Each basic force unit must have three items of information associated with it for identification purposes: the TOE number,

the TOE title, and its mission/area. It is highly desirable that BFU names include, where applicable, the name of the major item of equipment found in each basic force unit. Thus, naming a basic force unit "Armored Battalion M-60 Tank" is to be preferred to "Armored Battalion, Tank" or "Armored Battalion Medium Tank." Obviously, many component units are to be found in more than one mission/area because the same parent units, such as infantry divisions, are located throughout the world. However, this type of component unit is treated as a separate basic force unit for each mission/area in which it appears, because personnel and materiel requirements and priorities may differ by area.

The development of BFU inputs is analogous to the development of TOE's, in that lists of personnel and equipment are drawn up. In developing inputs for new BFU's, two types of BFU's are encountered: BFU's which have "real life" counterparts in the Army (e.g., FA Battalion Howitzer 105 SP, TOE 6-345E) and BFU's for units which are contemplated for future introduction into the Army (e.g., Nike-X Battalion). Because virtually all of the Army's current and planned combat units are included already the cost model as BFU's, most of the operator's work will be concerned with the latter, more difficult to handle, type of basic force unit. A complete description of the development of a basic force unit for a new system is too detailed to discuss in this manual. The model operator is referred to <u>Army Cost Model Data: Part 1, Sources and Analysis</u>[2] for a more complete discussion of the various aspects of developing new units.

The problems are much simpler for BFU's which can be based on existing TOE's. TOE's provide adequate guidance for personnel inputs at this stage of model development except for deviations in manning levels and numbers of flight-rated personnel. TOE's are inadequate guides for materiel inputs because the TOE equipment specifications are ambiguous and there are no guides to phasing new materiel. However, TOE's do provide a starting point. If a new BFU involves new items of materiel, additional data will be required (see Chapters 6 and 7).

In the simplest of cases the operator may modify an existing BFU for use as a new force unit by changing only a few of the inputs found in an existing BFU - e.g., the addition or deletion of a materiel item. The rest of the new BFU is copied from an existing BFU without change. The operator must be certain that the changes he makes do not have an impact on other inputs. For example, the substitution of one missile type for another missile type may change personnel requirements so that manning must be revised. Excluded from consideration here are cases in which existing BFU's can be utilized by the scaling up or down of the unit by use of the model adjustment factors. This does not constitute the creation of a new basic force unit.

The titles and codes for Input Sheet II follow the same pattern as Input Sheet I (see discussion of major force units, Section 5.2.2).

5.3.2 Personnel Inputs

The Input Sheet II form is not segregated as to type of input entered, but it will be more convenient if a pattern is established.

Personnel inputs are entered on the top lines of the initial set of input sheets. Only the personnel types actually required for the basic force unit should be entered in the stub. All military and civilian personnel directly assigned to the basic force unit should be entered by the appropriate personnel type. Personnel may be varied over time to take into account the phasing in or phasing out of the unit. This can be accomplished either by the numbers entered on the top of the sheet or by the adjustment factors at the bottom of the sheet. If the change in personnel is temporary - e.g.,for a particular alternative force - it will be easier to use the personnel adjustment factors .

A problem encountered with the estimates of personnel for new units is that there are no guides as to manning levels for these new units. Generally there are three levels of manning which can be used: TOE strengths, authorized strengths, and actual assigned strength. If a unit is completely new, the actual strength will not be available. The authorized strength is closely comparable to the actual strength of units but it has the advantage of smoothing out random fluctuations in actual assigned strength. However, the TOE strengths give the greatest long-run flexibility for they provide a clear-cut, easily understandable base. Users are more likely to be familiar with and understand TOE strength. By using either the BFU or MFU personnel adjustment factors, changes in the manning levels can be made quickly and easily to meet user needs. The operator should be certain that the user knows which manning level is being used and thoroughly understands the implications of the choice.

The operator must specify all personnel by type; for example, he must determine whether the personnel receive hazardous duty pay or whether they are to be on flight status.

The composition of new units may be such that new personnel types will be required in the model. The criterion for making this decision is the adequacy of the pay and allowance, training, and turnover factors currently entered in the model. If these factors do not provide sufficiently accurate personnel costs for the new unit, additional personnel types will have to be created. This is likely to be required only when a radically new system is introduced - such as the Nike-X (see Section 8.1 for a more complete discussion of adding new personnel types).

5.3.3 Materiel Inputs

The initial allowance of each major item of materiel included in the basic force unit must be entered on the BFU input sheet. For items other than ammunition or missiles this is the same as the full strength allowance shown in the TOE's. In the case of missiles the operator should enter the total stockage requirements per unit for combat consumption (see the discussion of missile requirements in Army Cost Model Data: Part 1, Sources and Analysis[2]). Ammunition requirements are computed in the model and are not entered on the BFU input sheet (see Sections 6.1.6 and 6.2).

The operator has to determine which materiel items should be included. The decision should be based on both the total procurement cost of the items as well as the demands of the user. Thus, the operator should enter all items which have a total procurement cost that is large enough to include them in the list of major items and he should add any items which the user wants to see in the model materiel annex.

No TOE's will be available for many of the new basic force units. In some instances the information can be obtained from draft TOE's and other planning documents. At other times the operator will have to create synthetic TOE's by analogy to existing units, by reference to other data sources and by consultation with the user.

5.3.4 Maintenance Costs

For each BFU, maintenance costs (BP 2300) are calculated manually on a dollars per item basis and then aggregated to the basic force unit level for entry on the BFU input sheet. If the materiel items of a new unit differ significantly from other units, entirely new maintenance costs must be estimated. For example, the introduction of a Nike-X unit would require a detailed analysis of maintenance requirements. If, however, the new unit differs from the former unit only by the addition of a new major item of equipment, the maintenance costs for the former BFU may be adjusted simply to account for the cost of maintaining the new equipment. (see Chapter 6 of Army Cost Model Data: Part 1, Sources and Analysis[2] for a discussion of methods of computing maintenance costs).

5.3.5 Construction Costs

If construction costs are incurred in introducing a new unit into the force, these one-time costs should be calculated for each basic force unit. Construction costs should include only the major initial construction peculiar to the new system (e.g. missile launch cells) because other construction costs are included in the model by means of a per man factor. These initial construction costs will not be lagged if they are entered

on the BFU input sheet (Input Sheet II) since no provision for lagging construction costs has been made in the Mark I model. If these costs are to be lagged, they should be lagged by hand and entered on Input Sheet I as a thruput. Such construction costs would be an aggregate of the construction costs for all of the basic force units included in that major force unit (see Section 5.2.4).

5.3.6 Manning/Equipage Levels

The adjustment factors for personnel and equipment are discussed in Section 5.2.3 and are taken up in greater detail in Section 7.5, "Materiel Adjustment Factors," and in Section 8.3, "Changes in Manning Levels." The adjustment factors appearing on Input Sheet II are applied only to that particular basic force unit for which the sheet is made out. Generally, the adjustment factors are left blank and the model program automatically enters the factor of 1.0. The operator may wish to enter new units at the actual or theoretical full TOE strength and use the adjustment factors to reach some other strength - either higher or lower. The operator is cautioned to make certain that the user understands the levels being used.

5.3.7 Other BFU Inputs

If the operator has other cost data which is to be associated with the individual basic force unit, the dollar costs can be entered on Input Sheet II. Such costs may be one-time only costs, costs which are constant, or time-phased costs. Two cautions are in order: (1) Such costs must be entered on a per-basic-force-unit basis; (2) These

costs will be multiplied by the force structure of BFU's on the MFU input sheets. In years when there is no force, none of these costs will appear. See Sections 13.2 and 9.2 for instructions on coding BFU dollar inputs.

Chapter 6

ADDING NEW MATERIEL ITEMS

This chapter contains the following sections:

6.1 ITEMS OTHER THAN AMMUNITION
- 6.1.1 Initial Allowance
- 6.1.2 Replacement of Other Items
- 6.1.3 Unspecified Units Allowance Factor
- 6.1.4 Stockage and Consumption Factors
- 6.1.5 Phasing Schedules
- 6.1.6 Related Ammunition
- 6.1.7 Unit Cost
- 6.1.8 Lag Factors
- 6.1.9 Maintenance Cost
- 6.1.10 Indirect Effects

6.2 AMMUNITION ITEMS
- 6.2.1 Using Weapons
- 6.2.2 Stockage and Training Factors
- 6.2.3 Old Ammunition Items Being Replaced
- 6.2.4 Unit Cost
- 6.2.5 Lag Factors

6.1 ITEMS OTHER THAN AMMUNITION

New materiel items other than ammunition to be added into the model can be considered in two groups: modernization items which are introduced into existing units; and new weapon systems (such as NIKE-X) which involve the creation of new organizational units. This section deals only with the introduction of modernization items (such as GOER vehicles or the M-14 rifle); for introduction of weapon systems into new units, see Chapter 5, "Adding New Force Units." Table 6.1 lists the inputs to be developed in order to introduce a new item.

The following sub-sections describe the procedures which are appropriate for each of the necessary inputs. The "operator" should be familiar with Chapter 5, "Materiel Specifications and Costs," of Army Cost Model Data: Part 1, Sources and Analysis,(2) in which the procedures followed for the original inputs are described.

Table 6.1

INPUTS REQUIRED TO INTRODUCE A NEW ITEM

	Input Sheet	Sub-Section
INPUTS FOR FORCE SPECIFICATION		
Initial allowance per basic force unit	II	6.1.1
Old items being replaced and the ratio of replacement	II	6.1.2
Unspecified units allowance factor	III B	6.1.3
Replacement/consumption factor	III B	6.1.4
Materiel phasing schedule	III A	6.1.5
COSTING FACTORS AND RELATIONSHIPS		
Unit cost per item	III C	6.1.7
Delivery to T.O.A. lag factors	III C	6.1.8
Maintenance cost per item	II	6.1.9
INPUTS REQUIRED TO ACCOUNT FOR INDIRECT EFFECTS		
Stockage and consumption factors for ammunition related to the new item	III B	6.1.6
Requirements for equipment other than ammunition affected by the new item	II	6.1.10
Effects on personnel strength	II	6.1.10

Before following the procedures described in this chapter, the operator must decide that the new item should be entered specifically into the model. The criteria to be considered are discussed in section 5.1 of Army Cost Model Data: Part 1, Sources and Analysis.[2] If the item is to be specified, a code number must be assigned (see Section 13.2 of this manual).

6.1.1 Initial Allowances

The operator must obtain specific allowances. In general, the allowances should be entered into the basic force unit specifications. For items of very high unit cost and limited distribution, the operator may choose instead to enter them directly as a part of the major force unit specification.

Before entering the initial allowances, the operator must consider whether or not to use a phasing schedule and to specify the allowance at the generic level (see Sub-section 6.1.5).

6.1.2 Replacement of Other Items

Information on the old items being replaced is needed in order to reduce their quantities as the new item is phased in. This information also may be needed to calculate the initial allowance of the new item since this often is expressed in terms of the old items or models being replaced.

Because a new item may replace several old ones the operator should identify all old items being replaced and also determine the ratio of replacement. A new helicopter, for example, may replace an old model helicopter as well as other aircraft.

The quantities of an old item can be reduced or eliminated in two ways. In most instances it is accomplished by means of the materiel phasing schedule of the new item (Input Sheet III A). However, if the new item replaces more than one old item the change in the old items may be accomplished more easily by changing the initial allowances of those items in all appropriate basic force units on Input Sheet II.

6.1.3 Unspecified Units Allowance Factor

If the new item is to be used by support units and other unspecified force units, the requirements of such units must be specified in the model by the Unspecified Units Allowance Factor on Input Sheet III B. See Section 5.5 of Army Cost Model Data: Part 1, Sources and Analysis[2] for derivation of this factor.

6.1.4 Stockage and Consumption Factors

Input Sheet III B provides space for the following three factors:

Replacement/consumption rate

Combat consumption rate

Maintenance float coefficient.

Each factor must be obtained for a new item. Development of factors used in the Mark I Model is described in Chapter 5 of Army Cost Model Data: Part 1, Sources and Analysis[2]. If no data are available on a new item, the operator may have to develop factors by analogy to similar equipment items.

The combat consumption rate is used in combination with the "days-of-supply" figure (Input Sheets IV A, B) in computing the combat consumption stock level. If this days-of-supply figure is not appropriate for the new item, the combat consumption rate for the new item should be altered accordingly (see Section 7.2).

6.1.5 Phasing Schedules

The operator must decide whether or not to use a phasing schedule for the new item. If the item is specified generically for MFU's or BFU's, in other words, if the initial allowances are stated with code "30XXX", then a materiel phasing schedule must be provided. But the item, if desired, may be specified individually, with code "31XXX", and "phased in" by changing the initial allowances from year to year, thus by-passing the need for a phasing schedule.

The decision as to whether or not to use a phasing schedule depends on the particular circumstances. Where a substitute item reasonably can be expected, a phasing schedule should be prepared. If the materiel item is authorized for several basic force units, then a phasing schedule probably should be prepared to save clerical effort required to "time-phase" the initial allowance for each BFU. If there is any reason to distinguish between mission/areas as to priority of introduction, then a phasing schedule should be prepared.

If a phasing schedule is to be prepared, the task will be essentially identical to the one described in Section 5.6 of Army Cost Model Data: Part 1, Sources and Analysis.[2] However, for new items the operator may have difficulty in defining the inventory objective and the year by year delivery schedules for the base case. Once these data are available, the phasing schedule for the new item can be prepared by the same iterative technique used for the original model inputs.

Phasing schedules are discussed further in Section 7.4.

6.1.6 Related Ammunition

If the new item being introduced uses a new ammunition item, the operator should be guided by Section 6.2 of this manual. If the new item being introduced uses ammunition already specified in the model, the operator must supply both training and combat consumption rates for each ammunition item related to the new materiel item. Ammunition factors are entered on Input Sheet III B. Derivation of appropriate rates is discussed in Section 5.4 of Army Cost Model Data: Part 1, Sources and Analysis.(2)

6.1.7 Unit Cost

Unit cost must be entered on Input Sheet III C for the new item. The derivation of costs is discussed in Section 5.7 of Army Cost Model Data: Part 1, Sources and Analysis.(2) Procedures related to unit costs in the model are set forth in Section 7.3 of this manual. Derivation of costs for new items may require analogy to existing items.

6.1.8 Lag Factors

A necessary part of the description of the new item is its lag factor pattern. Section 5.8 of Army Cost Model Data: Part 1, Sources and Analysis(2) explains the derivation of the initial Delivery-to-TOA lag factors. For a new item the operator may have to determine the lag factor pattern by analogy to like items if no procurement program is available. When the appropriate lag factor pattern has been selected the operator must determine whether that pattern is already available in the model (see the Standard Input Listing). If not, a new index number must be assigned for the new pattern.

Suppose, for example, that a new item coded as 31684 is determined to have the lag pattern of 50% three years, 50% two years, and that the patterns in the model are those shown on the sample Input Sheet IV C included in Section 13.1 of this manual. An additional entry then should be made as follows:

ID					M/A	Code					F	N-6					N-5					N-4					N-3					N-2					
01	02	03	04	05	06	07	08	09	10	11	12	13	14	15	16	17	18	19	20	21	22	23	24	25	26	27	28	29	30	31	32	33	34	35	36	37	38
0	0	0	0	1	A	0	0	9	7	2	7																0	5	0	0	0	0	5	0	0	0	

For the new item, the entry on Input Sheet III C then will include:

ID					M/A	Code					F	Index				
01	02	03	04	05	06	07	08	09	10	11	12	13	14	15	16	17
3	1	6	8	4	A	0	0	0	3	5	T	0	0	9	7	2

6.1.9 Maintenance Cost

See Section 9.2 of this manual for general coverage of maintenance costs. Costs per BFU chargeable to BP 2300 are entered as code 06660. A new materiel item may involve a change in the unit maintenance cost. The operator should review the BP 2300 input for each BFU in which the new item is to be authorized, and should make appropriate adjustments, using the data file change procedure described in Section 13.5 of this manual.

6.1.10 Indirect Effects

Introduction of a new materiel item may cause other changes in the force specification. One important aspect is that of the personnel

strengths of the units to which the new item is assigned. A new aircraft, for example, may require additional pilots. If a personnel change is made, further equipment changes, such as rifles for the men, also may be indicated.

The operator should review the specification of each BFU for which there will be an initial allowance of the new item. This review should be directed toward any modifications required because of the new item.

The operation also should consider specifically the indirect effect of the new item on other equipment items (see Section 6.1.2 for replacement of other items).

6.2 AMMUNITION ITEMS

This section lists and explains the inputs needed to introduce a new ammunition item.

Ammunition items are treated separately because some of the inputs needed differ from those of other materiel items. The difference is due to the fact that the requirements for ammunition are related to the number and type of using weapons while requirements for other materiel items are directly related to the units and entered on Input Sheet II. Inputs needed to introduce a new ammunition item are discussed below.

6.2.1 Using Weapons

Each weapon using the new ammunition item should be identified. For those weapons already specified in the model, stockage and training factors must be obtained as described in Section 6.2.2.

For using weapons not specified already, a decision must be made as to which ones to specify. Specification of all using weapons is necessary if requirements for the new ammunition item are to be calculated completely. For those weapons to be specified, follow procedures in Section 6.1.

6.2.2 Stockage and Training Factors

The requirements for ammunition are calculated by means of a combat consumption factor and an annual training factor. Combat consumption is expressed in terms of the number of rounds per weapon per day; training consumption is stated in terms of rounds per weapon per year. The factors should be obtained for each using weapon and entered on Input Sheet III B.

The model does not provide for an "ammunition phasing schedule," and the assignment of a new ammunition item in a given year will generate a delivery requirement in that year. The rate of phase-in can be controlled by the operator directly on Input Sheet III B by time-phasing the ammunition factors.

6.2.3 Old Ammunition Items Being Replaced

The operator must identify all previously specified ammunition items which are to be replaced by the new ammunition item. The user should define the nature of the phase-out for these old items. The operator can make sure that no deliveries of the old item are scheduled after any specified year by reducing the ammunition factors to zero on Input Sheet III B starting with that year.

6.2.4 Unit Cost

The requirement for unit cost data for ammunition is the same as for other items. See the discussion in Sub-section 6.1.7 of this manual, and in Section 5.7 of Army Cost Model Data: Part 1, Sources and Analysis.[2]

6.2.5 Lag Factors

Here, as for unit costs, the inputs required are similar to those for other materiel items. See Sub-section 6.1.8 of this manual and Section 5.8 of Army Cost Model Data: Part 1, Sources and Analysis.[2]

Chapter 7

OTHER MATERIEL CHANGES

This chapter covers a number of different types of costing problems involving materiel. The following sections are included:

7.1 CHANGE IN INITIAL ALLOWANCES (INPUT SHEET II)
- 7.1.1 Unit Oriented Changes
- 7.1.2 Item Oriented Changes

7.2 VARIATION IN COMBAT CONSUMPTION STOCKAGE POLICY

7.3 CHANGE IN UNIT COST (INPUT SHEET III C)
- 7.3.1 Unit Costs Based on Progress Curves
- 7.3.2 Other Unit Costs

7.4 MATERIEL PHASING SCHEDULES
- 7.4.1 Purpose and Use of Phasing Schedules
- 7.4.2 Development of Alternative Phasing Schedules

7.5 MATERIEL ADJUSTMENT FACTORS

7.6 DELETION OF ITEMS
- 7.6.1 Deletion of Substitute Items
- 7.6.2 Deletion of Phasing Schedules
- 7.6.3 Deletion of Lag Factors
- 7.6.4 Deletion of Specified Items

7.1 CHANGE IN INITIAL ALLOWANCES (INPUT SHEET II)

Input Sheet II is used to specify the materiel initial allowance (TOE requirement) for each BFU in the model. This per unit initial allowance is the basic objective for operating inventories. Other calculations of materiel requirements are based on the per unit initial allowances. Section 13.4 of this manual describes the input listings in which the initial allowances can be reviewed.

Changes in initial allowances may be of two main types:

(a) Unit oriented changes. In changes of this type, changes in a force unit create a need to change the allowances of all or several of the materiel items in the unit.

(b) Equipment oriented changes. The initial allowance for a particular item is changed in several or all BFU's because of a change in the item or its use.

Each of these types is described in the following subsections. In either case, once the desired data changes have been identified, the changes are to be made as described in Section 13.5 of this manual.

7.1.1 Unit Oriented Changes

When a change in a force unit has been decided upon the "operator" should consider the desirability of a change in the equipment adjustment factor (code 00097) for the force unit. This will change all selected materiel items at the same rate, but the factor can be stated separately for each of twelve years. Usually the impact of the change can be specified with greater precision by defining specific changes in initial allowances. The use of the adjustment factor is reserved for situations in which changes must be made quickly to all materiel items.

The operator should consider not only the total changes to be made in unit equipment allowance, but also the time-phasing of the changes. The operator must decide whether to specify any change in the phase-in rates (see Section 7.4 for a discussion of the use of materiel phasing schedules).

The change in equipment allowances which is to be made on the basis of a change in the unit may suggest, in turn, the need for further changes in the unit. Changes in maintenance cost (see Section 9.2 of this manual) and personnel requirements (new items of equipment may require specialized operators) may be appropriate.

Changes in basic force units are discussed further in Section 4.2 of this manual.

7.1.2 Item Oriented Changes

When a change in the initial allowances of a materiel item is considered, the following procedures are appropriate:

(a) Identify the units which have allowances for the item and the amounts of those allowances. Identify also all other inputs for the item, e.g., phasing schedule, unit cost, lag factor pattern, consumption rates. Use the Input Listings, as described in Section 13.4 of this manual.

(b) Determine whether or not the proposed change can be made most effectively by changing the phasing schedule. The equipage level in a particular mission/area for a particular item could be raised, for example, to 110% of the level previously authorized. There would be no need to change each BFU authorization.

(c) Review the appropriateness of the unspecified unit equipment allowance factor (Input Sheet III B) under the proposed alternative. A change in the authorization for the specified force units may require a change in this factor.

(d) Review the appropriateness of the unit cost and lag factors under the proposed alternative.

(e) Consider whether or not allowance changes should be accompanied by any other changes, such as personnel or maintenance cost changes.

(f) Consider whether related changes should be made for other materiel items.

(g) Revise input data in accordance with the change procedures outlined in Section 13.5 of this manual.

7.2 VARIATION IN COMBAT CONSUMPTION STOCKAGE POLICY

Combat consumption stocks are those materiel reserves which provide for replacement of items consumed during the early days of combat. These stocks are intended to last from the day combat begins to the day the production rate equals the wartime consumption rate.

Combat consumption stocks are computed in the model as the product of four quantities:

(a) Initial Allowances (items) (Format II)

(b) Combat Consumption Stock Factor (% per day) (Format III B)

(c) Days of Supply (days) (Format IV A, B)

(d) Stock Level Adjustment Factor (percentage) (Format IV A, B)

Certain problems for which the model may be used will require that combat consumption stocks be varied. Variations may be accomplished by varying any of the four parameters listed above. This section concerns variations of stocks only, not initial allowances, and only variations of stockage factors, adjustment factors and days-of-supply are considered.

The available alternatives for varying combat consumption stocks are presented in Table 7.1. As shown, stocks can be varied for all items simultaneously or selectively by item; for all mission/areas or selectively by mission/area; and for all years or for each year individually.

To vary stockage, select the proper factor according to the problem under study and prepare changes to input data as outlined in Section 13.5 of this manual.

(g) Revise input data in accordance with the change procedures outlined in Section 13.5 of this manual.

7.2 VARIATION IN COMBAT CONSUMPTION STOCKAGE POLICY

Combat consumption stocks are those materiel reserves which provide for replacement of items consumed during the early days of combat. These stocks are intended to last from the day combat begins to the day the production rate equals the wartime consumption rate.

Combat consumption stocks are computed in the model as the product of four quantities:

(a) Initial Allowances (items) (Format II)

(b) Combat Consumption Stock Factor (% per day) (Format III B)

(c) Days of Supply (days) (Format IV A, B)

(d) Stock Level Adjustment Factor (percentage) (Format IV A, B)

Certain problems for which the model may be used will require that combat consumption stocks be varied. Variations may be accomplished by varying any of the four parameters listed above. This section concerns variations of stocks only, not initial allowances, and only variations of stockage factors, adjustment factors and days-of-supply are considered.

The available alternatives for varying combat consumption stocks are presented in Table 7.1. As shown, stocks can be varied for all items simultaneously or selectively by item; for all mission/areas or selectively by mission/area; and for all years or for each year individually.

To vary stockage, select the proper factor according to the problem under study and prepare changes to input data as outlined in Section 13.5 of this manual.

Table 7.1

VARIATION OF COMBAT CONSUMPTION STOCKS

Selectivity	Level	Time Span	Inputs to Vary	Input Sheet
All Items	World-Wide	All years	Days of Supply - Equipment Days of Supply - Related Equipment	IV A
All Items	Mission/Area	All years	Days of Supply - Equipment, M/A X Days of Supply - Related Equipment, M/A X	IV B
All Items	World-Wide	By year	Stock Level Adjustment Factor - Equipment Stock Level Adjustment Factor - Related Equipment	IV A
All Items	Mission/Area	By year	Stock Level Adjustment Factor - Equipment Stock Level Adjustment Factor - Related Equipment	IV B
By Item - except ammunition	World-Wide	All years	Combat Consumption Stock Factor for M/A "World Wide"	III B
By Item - except ammunition	Mission/Area	All years	Combat Consumption Stock Factor for M/A X	III B
Ammunition-By Item	World Wide	By year	Combat Consumption Rate for M/A "World Wide"	III B
Ammunition-By Item	Mission/Area	By year	Combat Consumption Rate for M/A X	III B

7.3 CHANGE IN UNIT COST (INPUT SHEET III C)

Unit costs entered in the model are selected for their appropriateness in the base case. Changes in unit costs may be appropriate under the following situations:

(a) Change in the time period covered by the model for time-phased unit costs (see Section 11.3).

(b) More current data is available on the unit cost for an item or items.

(c) An alternative force which calls for significant quantity differences from those in the base case.

(d) An alternative force which calls for different unit costs.

Unit costs are entered in the model on a yearly basis. For most items (about 90% of those in the initial selection) the same unit cost is used for each year in the model. Changes in unit cost are discussed below in two subsections according to the method of determining the unit costs.

7.3.1 Unit Costs Based on Progress Curves

Unit costs which vary by year are used for certain materiel items where a cost-quantity relationship of the progress curve type exists. Derivation of time-phased costs for the base case delivery schedule is discussed in Section 5.7 of Army Cost Model Data: Part 1, Sources and Analysis.[2] The time-phased unit costs entered into the model are appropriate only for the base case delivery schedule used in computing them. Changes in unit costs will be required when changes occur in delivery schedules of the progress curve costed items. For this reason

it is important to be alert to any changes which may affect these deliveries. A review of the need for revised time-phased unit costs is an important step prior to any model run. Because only a relatively few items, about 10% of those treated in the model, are costed in this way in the model, keeping abreast of their utilization is not difficult.

The following procedures are appropriate for review of time-phased unit costs before a run is made:

(a) Determine whether revised time-phased unit costs are needed:

(1) Before each run, review the changes being made to ascertain their affect on the delivery schedules of items for which the model has time-phased costs. Check the Inverse Listing --- see Section 13.4.2 of this manual -- if there is doubt about where these items are used.

(2) After each run review the delivery schedules in the model materiel annex for each item for which the model has unit costs based on progress curves.

(3) Compare the deliveries in the model with the delivery schedule of the base case, for which the unit prices were designed. If the deviations are significant, prepare new costs, as below, and make another run if necessary.

(b) Where needed, prepare revised unit costs:

(1) For each item, develop the delivery schedule for the alternative force. Give appropriate affect to all inputs, including adjustment factors.

(2) Obtain a cost/quantity curve for the item in question.

(3) Determine the total cost for the deliveries of each year.

(4) Determine the unit cost for each year.

(5) Enter the revised costs on Input Sheet III C, as described in Sections 13.3 and 13.5 of this manual. For year "N-1" enter the unit cost calculated for the first delivery year. Leave blanks for all other years in which no deliveries are expected. The model may develop small delivery quantities for these years. The format coding rules will assign reasonable costs to these units.

7.3.2 Other Unit Costs

Most other unit costs will be entered in the model as constants over the time period involved. The cost used probably will be the indicated average. If there is any reason to change one or more unit costs they can be changed readily for individual items and for specific years. Materiel costs, however, are applicable only for the "World-Wide" mission/area.

When a change in unit cost is to be made, the change procedure described in Section 13.5 will be appropriate. For example, the Input Sheet III C included in Section 13.1 of this manual shows the unit cost for the "Howitzer, Lt. SP, FT, 105mm, T195E1" to be $117,700 for each program year. Now suppose that a user wants to estimate an alternative force which involves a delay in phasing this weapon into the force. This delay could result in a reduction in the procurement cost in the later years because of the reduction in premium costs for expedited delivery. If the reduction is expected to be 10% (to a new unit cost of about $105,900) effective in year N+2, the old cost line should be replaced by a new entry as follows:

ID					M/A	CODE					F	N-1					N					N+1					N+2					
01	02	03	04	05	06	07	08	09	10	11	12	13	14	15	16	17	18	19	20	21	22	23	24	25	26	27	28	29	30	31	32	33
3	1	2	1	5	A	0	0	0	1	1	3	0	1	1	7	7											0	1	0	5	9	

7.4 MATERIEL PHASING SCHEDULES

7.4.1 Purpose and Use of Phasing Schedules

The phasing schedules entered on Input Sheet III A are important keys to the control over the computation of materiel costs in the model. A phasing schedule controls the rate of phase-in of each new major PEMA item and the phase-out of any old major item being replaced. For each entirely new major equipment item with no substitutes, a phasing schedule controls the rate of phase-in to the full inventory objective. The phasing schedules in the model may be varied both with respect to time and with respect to mission/area. The user and the operator may specify readily a wide range of alternatives. For any costing problem, the phasing schedule provides the ability to directly control the magnitude and timing of PEMA dollars for each specified item.

The phasing schedule translates initial allowance requirement statements for generic equipment types into asset positions for particular models in particular years. Thus, it is the instrument for specifying precisely what equipment an alternative force is to have for costing purposes. For this reason, adjustment of phasing schedules should be viewed as a key part of force specification.

Phasing schedules should be considered each time an alternative force is to be run. The question to be considered is, "Are the base case phasing schedules for each item appropriate for this alternative?" In many cases, the base case schedules will be appropriate for most,

and perhaps in some cases all, materiel items. The use of the base case schedules in pricing an alternative force postulates the same rate of modernization for the alternative as for the base force.

The phasing schedules in the original inputs were designed so that the deliveries for the base case in the model would simulate the deliveries in the Materiel Annex[3] of the Army Submissions to achieve specified inventory objectives. For a discussion of the derivation of the base case schedules, see Army Cost Model Data: Part I, Sources and Analysis.[2]

Since adjustment of phasing schedules is viewed properly as part of specification of the force, information for making adjustments, or for using the base case schedules with no adjustment, should come from the user. In most cases it will be impractical and probably unnecessary to review each phasing schedule with the user. One approach would be to review only the schedules for a few major items in which the user is particularly interested. A simpler procedure would be to inform the user that unless otherwise requested, the base case schedules will be used and the alternative force thereby "modernized" at the same rate as the base force. Regardless of the procedure chosen, the operator should state clearly what was done and the assumptions implicit in the choice when the results of the exercise are transmitted to the user.

The phasing schedules for the base case normally can be safely used for costing a wide range of alternative forces. Changes of an organizational nature generally would not require new phasing schedules. (See Section 7.4.2 if the total quantity of any one item to be delivered in a given year is large.) When an alternative involves primarily one specified

equipment item, or a few items, the phasing schedules of other specified items normally need not be considered specifically. When a personnel change is the major feature of an alternative, the existing materiel inputs probably can be used without change.

7.4.2 Development of Alternative Phasing Schedules

The development of the original phasing schedules in the model is described in Section 5.6 of Army Cost Model Data: Part I, Sources and Analysis.(2) Addition of new specified items into the model, as described in Chapter 6 of this manual, involves the development of phasing schedules for the new items. Chapter 11 suggests the periodic review of the existing inputs, including phasing schedules, in order to keep the base case valid. This subsection deals with the more specific task of developing a phasing schedule for an alternative specified by the user.

An alternative may shift priorities between mission/areas. The materiel phasing schedules for selected items under such circumstances quite reasonably might be modified in order to modify the delivery rates of new items between mission/areas.

Whenever an alternative force specification makes significant changes in initial allowances for major materiel items, the operator should consider the multiplier effects of the maintenance float and combat consumption stockage factors. If the alternative requires increases in initial allowances, the total deliveries in one specific year as determined by the model may be unrealistic. The operator should consider the desirability of stretching out the delivery period by using a more gradual phase-in rate.

For a discussion of procedures and data necessary for developing phasing schedules, see Army Cost Model Data: Part I, Sources and Analysis.[2] The minimum data necessary for developing a phasing schedule are:

(a) Mission/area priority schedule

(b) Year in which production (delivery) of the item is to begin

(c) Year in which units are to be at 100% inventory objective, or, approximate annual production rate desired.

7.5 MATERIEL ADJUSTMENT FACTORS

Once a base force has been specified, the operator can use adjustment factors to vary the specifications of an alternative, if desired. Table 7.2 shows the adjustment factors available for modifying materiel specifications. The first column of the table shows the name of the factor, as it is printed on the fixed form input sheets (see Section 13.1 of this manual). The second column of the table indicates the level of organization to which the factor is applied. The third column shows the items to which the adjustment is applied. The fourth column shows the fixed form input sheet on which the adjustment is provided. Changes should be entered in the manner described in Section 13.5.

The adjustment factors do not have to be used, since the model automatically supplies 1.0 for any adjustment factor left blank. They are available for the convenience of the operator where they can be used to specify an alternative. The adjustment factors for materiel normally should not be used without careful consideration of the

Table 7.2

MATERIEL ADJUSTMENT FACTORS

NAME OF FACTOR	LEVEL OF APPLICATION	CLASS OF EQUIPMENT SELECTED	INPUT SHEET
Adjustment Factor - Equipment	Basic Force Unit	Equipment (all items except ammo.)	II
Adjustment Factor - Equipment	Major Force Unit	Equipment (all items except ammo.)	I
Adjustment Factor - Repl./Consumption	Major Force Unit	Replacement/Cons. of equipment	I
Adjustment Factor - Related Equipment	Major Force Unit	Related Equipment Stockage (Ammunition)	I
Adjustment Factor - Train. Consumption	Major Force Unit	Related Equipment consumption (Ammo. Training requirements)	I
Eq. Combat Cons. Stock Level Adjustment Factor	Mission/Area	Equipment Stocks	IV B
Rel. Eq. Combat Cons. Stock Level Adjustment Factor	Mission/Area	Related Equipment Stocks	IV B
Eq. Combat Cons. Stock Level Adjustment Factor	World-Wide	Equipment Stocks	IV A
Rel. Eq. Combat Cons. Stock Level Adjustment Factor	World-Wide	Related Equipment Stocks	IV A

decisions which are involved. An overall percentage adjustment on equipment, with no corresponding adjustment of personnel, for example, would distort the relationship between enlisted man and rifles. There follows a brief listing of the factors, with a few remarks about the use of each.

The Equipment Adjustment Factor for basic force units may be used to adjust all major equipment items listed in the model for a particular basic force unit. For example, it can be used to vary the number of all equipment items in BFU 21060 K Infantry Battalions in Europe for the year N or for all years.

The Equipment Adjustment Factors for major force units are used as those for BFUs except that they are applied against major force units and cover all BFUs in the MFU. Moreover, they can be applied not only against equipment (all items except ammunition), but also against other classes of equipment, namely, related equipment (stockage requirements for ammunition), replacement/consumption (materiel attrition requirements), and finally, training consumption (the amount of ammunition required for training). For example, the related equipment factor can be used to adjust the amount of ammunition required for stockage for MFU 13050 K, Infantry Brigades in Europe, for the year N or all years.

The Equipment (or Related Equipment) Combat Consumption Stock Level Adjustment Factor (Input Sheet IV A, B) is used to adjust the stock level of all items of major equipment. The factor for related equipment is shown separately. It can be calculated either on a mission/area basis or on a World-Wide basis.

7.6 DELETION OF ITEMS

One important aspect of the constant maintenance of the model is the elimination of unneeded input items. Computer memory space and running time may be wasted unless deletions are made whenever they can be made without reducing the effectiveness of the model.

The following subsections discuss the criteria to be considered in connection with deletions of materiel data. The procedure for deletions is discussed in Section 13.5 of this manual.

7.6.1 Deletion of Substitute Items

When a phasing schedule has been established to provide for two specific items within one generic group, the operator should review periodically the utility of the two specific items. There may be little need for the older item in the model, particularly after the original phasing-in has been accomplished. Substitute items which generate no costs are of limited importance. Items which have no procurement cost, no maintenance cost, or which generate no requirements for related materiel (including ammunition) should be deleted unless a specifically useful purpose is identified.

7.6.2 Deletion of Phasing Schedules

Materiel items, in general, should be associated in the model with phasing schedules. See Sections 6.1.5 and 7.4 of this manual for criteria involved in the possible determination to specify materiel items directly in MFU's or BFU's without the use of phasing schedules.

Whenever a materiel item is deleted from the model, for any reason, the materiel phasing schedule related to it also should be deleted.

7.6.3 Deletion of Lag Factors

Any lag factor pattern no longer used or expected to be used should be deleted from Input Sheet IV C. To find out whether a pattern is used the operator can use the Inverse Listing. He should look among the code "00035" entries with ID's in the materiel (31XXX) series, and check for the appropriate index number in column 13-17 of the data field.

7.6.4 Deletion of Specified Items

The selection of the original items for the model is described in Section 5.1, Army Cost Model Data: Part I, Sources and Analysis.[2] Introduction of additional items is described in Chapter 6 of this manual, and is suggested as part of "Updating the Data Base" in Chapter 11. At any given time the specified materiel items should serve the purposes of the model. The operator should be alert to reductions in the importance of specified items. Any item formerly specified, which is no longer a significant element in the total cost of a force, should be deleted.

To delete an item it must be deleted from each BFU and MFU in which it has been specified. Once it is deleted, the related data of Input Sheets III A, III B, and III C also should be deleted.

To identify all data related to the item, the operator should locate the item in both the Standard and the Inverse Input Listings. In this way, the operator can identify every instance in which the code number of the item is used as either an ID (columns 1-5) or a

data code (columns 7-11). All data associated with the item should be deleted.

Chapter 8

PERSONNEL CHANGES

This chapter discusses the requirements for the addition of a new personnel type into the model. It also discusses how to make changes in the authorized strength of a unit and how to use the personnel adjustment factors for manning level changes in pricing alternative forces. The following sections are included:

8.1 ADDING A NEW PERSONNEL TYPE

8.1.1 Criteria for Adding a New Type

8.1.2 Inputs Required

8.2 CHANGES IN YEAR-END STRENGTH

8.3 CHANGES IN MANNING LEVEL (ADJUSTMENT FACTORS)

8.3.1 Factors Available to Adjust Personnel Requirements

8.3.2 Use of Adjustment Factors

8.1 ADDING A NEW PERSONNEL TYPE

There are 10 personnel types in the Mark I model. They are:

(1) Officer - flight rated

(2) Enlisted - flight rated

(3) Officer - hazardous duty

(4) Enlisted - hazardous duty

(5) Officer - other

(6) Enlisted - other

(7) Officer - trainer/trainee, Program VII

(8) Enlisted - trainer/trainee, Program VII

(9) Civilian - direct hire

(10) Civilian - contract foreign national.

Personnel types 7 through 10 are for manning purposes only and have no costs applied to them. The costs associated with the civilian personnel types are included in the Operations and Maintenance factors and thruputs. The costs associated with the trainers and trainees are included in the training cost of personnel types 1 through 6. Hazardous duty personnel in the model are primarily personnel on jump status.

Only the combat category units in Program II and Program III are specified in the model. The personnel in the Program II and III support units are included by means of a non-specified to specified personnel ratio. The non-specified to specified personnel ratio was developed by subtracting the number of specified personnel in the model by mission/area from the total number in the Army Program Submission (3) in each geographic area. The ratio was then derived as follows:

$$\text{ratio} = \frac{\text{Non-specified personnel (by type)}}{\text{Total specified military personnel}}$$

The ratios were developed by Program, by mission/area, by year, for the following categories: Officers, Enlisted man, Civilians-direct hire, and Civilians-contract foreign national.

8.1.1 Criteria for Adding a New Type

In general, new personnel types are made desirable by significant changes in personnel costs - whether the cost changes are due to pay and allowance costs, training costs, turnover rates, or a combination of all these costs. When the operator, through research, has developed

a pay and allowance factor, and/or turnover rate, and/or training cost that is different from the factors in the model, and which is to be applied to a type of personnel not already in the model, the operator has the requirement for adding a new personnel type. For example, if a missile unit is being added to the model and the training cost for the personnel of the unit is significantly different from the training costs for the personnel types already in the model, the operator then may wish to add a new personnel type. Another example: if the operator has determined those enlisted personnel on flight status who are also receiving proficiency pay, which increases the pay and allowance factor for this personnel type, the operator may then add a new personnel type to reflect this increased pay.

8.1.2 Inputs Required

To add a new personnel type, the following information is required:

(a) The code, i.e., 4XXXX, for the new type. Any five digit personnel code within the following constraints and not previously used is permissible: officers - code 41XXX; enlisted - code 42XXX; civilian - code 43XXX.

(b) Input Sheet I and Input Sheet II:

- The MFUs and/or BFUs to which the new type is assigned.
- The number of the new type in each MFU and/or BFU in each year.

(c) Input Sheet III D:

- Pay and allowance factors by mission/area.
- Turnover rate by mission/area.
- Training cost for the new personnel type.
- Replacement/deficiency construction cost, which will be the same as the cost used for the other personnel types.

(d) Input Sheet III E:

- Unspecified personnel ratio. When a new personnel type is added, the non-specified to specified personnel ratios should be reviewed, since the ratios may change (see Army Cost Model Data: Part I, Sources and Analysis,[2] Section 4.2).

8.2 CHANGES IN YEAR-END STRENGTH

BFU or MFU personnel strength changes are made in the following manner:

Before:

"Officers, other" in a BFU or MFU

						N-1						N					
7	8	9	10	11	12	13	14	15	16	17	18	19	20	21	22		
4	1	0	4	0	2				7	6							

To change the number of "Officers, other" in this unit from 76 to 96, change 76 to 96. Do not enter the increment of 20. The entry now is:

After:

						N-1						N					
7	8	9	10	11	12	13	14	15	16	17	18	19	20	21	22		
4	1	0	4	0	2				9	6							

The unit strength can also be changed by year - for example, to reflect a unit building up to full strength.

Before:

N-1					N				
13	14	15	16	17	18	19	20	21	22
			7	6					

To change the number of "Officers, other" in this unit from 76 to 96 beginning in the year N, 96 would be entered in year N as follows:

After:

N-1					N				
3	14	15	16	17	18	19	20	21	22
			7	6				9	6

8.3 CHANGES IN MANNING LEVEL (ADJUSTMENT FACTORS)

This section lists all personnel adjustment factors available in the model and explains how they are applied.

The adjustment factors can be used in costing alternative Army force structures. They should be used for broad departures from the base case. For example, if the assignment is to increase personnel by 10 percent "across the board," it is much easier for the operator to accomplish this using the adjustment factors than by making the corresponding changes in the authorized strength of the units by the method outlined in the previous section (Section 8.2).

8.3.1 Factors Available to Adjust Personnel Requirements

Table 8.1 lists each of the personnel adjustment factors available in the model. The first column in the table shows the name of the factor (the name is the same as that shown on the input sheets used in the model). The second column indicates the level of organization to which the factor is applied. The third column refers to the class of personnel selected and includes all personnel in the class; e.g., "Officers," refers to all officers in the specified organization. The

Table 8.1

PERSONNEL ADJUSTMENT FACTORS

NAME OF FACTOR	LEVEL OF APPLICATION	CLASS OF PERS. SELECTED	INPUT SHEET
(1)			
a. Adjustment Factor - Officer	Basic Force Unit	Officers	II
b. Adjustment Factor - Enlisted Men	Basic Force Unit	Enl. Men	II
c. Adjustment Factor - Civilian	Basic Force Unit	Civilians	II
(2)			
a. Adjustment Factor - Officer	Major Force Unit	Officers	I
b. Adjustment Factor - Enlisted Men	Major Force Unit	Enl. Men	I
c. Adjustment Factor - Civilian	Major Force Unit	Civilians	I

last column lists the input sheet on which the factor is entered. For example, the first factor shown on the table (1a) adjusts the total number of officers in a specific basic force unit and is entered on Input Sheet II. If there is more than one officer type in the unit, the officer adjustment factor will be applied against all officer types.

The two different types of factors shown in the table are explained below. The numbers refer to those shown under the "Name of Factor."

(1) The Adjustment Factors for basic force units are used to adjust the number of officers, enlisted men, or civilians in specified basic force units. For example, (1a) can be used to vary the number of officers in BFU 20150 K (Engineer Battalions in Europe) for a single year (or for all years).

(2) The Adjustment Factors for major force units are used in the same manner as those for BFU's except that they are applied not only to the personnel assigned to the MFU but also to the personnel assigned to all BFUs which are part of the MFU.

While the adjustment factors are aimed at certain types of adjustment, a few of them overlap. Thus one should understand the factors well enough so that the most convenient factor can be selected for the problem at hand. For example, if the general manning level of all units in Europe has to be increased by 10 percent in costing an alternative force, it can be done in several ways. One can either use the BFU adjustment factors or the MFU adjustment factors, and enter 110 percent for all units in Europe. However, because there are fewer

MFUs than BFUs, the MFU adjustment factors would be the most efficient ones to use.

8.3.2 Use of Adjustment Factors

The following example illustrates how the personnel adjustment factors are used:

BFU Before:

							N-1					
Adjustment factor, officer	7	8	9	10	11	12	13	14	15	16	17
	0	0	0	6	1	1					
Officer, other	4	1	0	4	0	2				7	6

The number of "Officers, other" in the above unit is:

Officers, other x officer adj. factor

76 x 1.0000 = 76

The 1.0000 is supplied by the computer program. For a more detailed explanation see Section 13.2.3 on format codes.

To increase the number of "Officers, other" in the unit by 26 percent, add 0.2600 to 1.0000 and enter 1.2600 in the officer adjustment factor line. The above example will now appear as follows:

BFU After:

							N-1				
Adjustment factor, officer	7	8	9	10	11	12	13	14	15	16	17
	0	0	0	6	1	1	1	2	6	0	0
Officer, other	4	1	0	4	0	2				7	6

The number of "Officers, other" in the unit now is:

Officers, other x officer adj. factor

76 x 1.2600 = 96

The personnel adjustment factor also can be used to vary personnel strength by year as in the following example:

BFU Before:

Adjustment factor,
officer

						N-1					N					N+1				
7	8	9	10	11	12	13	14	15	16	17	18	19	20	21	22	23	24	25	26	27
0	0	0	6	1	1															

Officer, other

4	1	0	4	0	2				7	6										

If the manning level is to be increased by 26% for only year N, enter 1.2600 in the adjustment factor line for year N and enter 1.0000 for year N + 1 in order to return the personnel strength to the original level of year N - 1. The example now would appear as follows:

BFU After:

Adjustment factor,
officer

						N-1					N					N+1				
7	8	9	10	11	12	13	14	15	16	17	18	19	20	21	22	23	24	25	26	27
0	0	0	6	1	1						1	2	6	0	0	1	0	0	0	0

Officer, other

4	1	0	4	0	2				7	6										

The number of "Officers, other," by year, in the unit now is:

Officers, other x officer adjustment factor

Year N - 1	76	x	1.0000	=	76
N	76	x	1.2600	=	96
N + 1	76	x	1.0000	=	76
Following years	76	x	1.0000	=	76

The personnel strengths in the Mark I model are authorized strengths which may or may not be equal to the TO&E Requirement (full strength). Understanding of this distinction is important when changes are to be made. For example, when the assignment is to increase the manning level by 10%, this could mean that the authorized strength itself should be increased by 10% or that the manning level should increase by 10% of the full strength. The operator must determine, before he begins to make a change, what the user wants when he asks to change the manning level.

Chapter 9

DOLLAR INPUTS

Chapters 4 through 9 of this manual describe the methods used in the model to specify physical and organizational aspects of the force. Dollar amounts also may be entered directly in the Army Cost Model when appropriate. Many kinds of support cost are relatively invariant with changes in the force and most readily can be entered directly as items of cost. This chapter deals with such direct dollar inputs as well as with certain organizationally related cost factors. The following sections are included:

9.1 MFU DOLLAR INPUTS
- 9.1.1 MFU Cost Thruputs (Data Code 03XXX)
- 9.1.2 Materiel Annex Thruputs (02XXX)
- 9.1.3 Per Man Dollar Inputs (04XXX and 05XXX)

9.2 BFU DOLLAR INPUTS
- 9.2.1 BFU Materiel Annex Dollar Inputs (02XXX)
- 9.2.2 Per Unit Cost Inputs (06XXX and 07XXX)

9.3 COST CATEGORY CODES

9.1 MFU DOLLAR INPUTS

MFU dollar inputs are of three types, as listed below. These inputs are entered on Input Sheet I and coded as shown:

(a) Cost Thruputs, code 03XXX

(b) Materiel Annex Thruputs, code 02XXX

(c) Per man cost factors, code 04XXX or 05XXX.

9.1.1 MFU Cost Thruputs (Data Code 03XXX)

Dollar inputs may be appropriate for support costs where no specific organizational relationships or other cost estimating relationships are known to exist. Some budget accounts (for example, BA 1705

"Promotion of Rifle Practice") are included in the model in order to account for the total Army budget. The model does not estimate the costs in such budget accounts; the input amounts are included, along with the cost estimates produced in the model, in the output reports. For this reason these costs are called "thruputs." The steps involved in entering cost thruputs for a budget account are:

(a) Identify the cost as one of the following three major types: research and development, investment, or operations.

(b) Find the data code assigned for the appropriate budget category within the selected major cost type. A list of cost category codes is included in Section 9.3.

(c) Prefix the selected 3 digit code by the digits 03. The input will then start with: columns 1 through 5 - MFU Identification number; column 6 - Mission area: columns 7 through 11 - 03XXX, where "XXX" is the selected code pattern.

(d) Determine the dollar amounts which should appear in the output reports for each year.

(e) Select the appropriate format code for column 12. (See Section 13.2.3 of this manual.)

(f) Enter the amounts in the appropriate data fields by year.

The model determines some specific costs, such as BP 2300 maintenance costs, on the basis of per unit or per man costs for the specified portions of the combat force. Additional costs of these same types are

incurred by unspecified force units. In the model such additional costs are entered as thruputs to be combined, according to the last three digits in the data code, with the cost calculated for the specified units.

9.1.2 Materiel Annex Thruputs (02XXX)

Costs and quantities for materiel items are included not only in the major force unit output reports; they are included also in the model materiel annex. PEMA costs which cannot be estimated readily on the basis of specific items procured, e.g. STARCOM, can be entered in the form of dollar thruputs. Such materiel thruputs are coded 02XXX so that they will appear in the materiel annex. To enter a materiel annex thruput, the following procedures are appropriate:

(a) Identify the appropriate code. All materiel annex thruputs are coded 02XXX in columns 7 through 11. The Inverse Listing (see Section 13.4.2 of this manual) will be the appropriate reference. If no code has been assigned, see Section 13.2.5. A new dictionary entry will also be needed (see Section 13.6).

(b) Enter the cost, by years, in the same manner as for non-materiel costs, described in Section 9.1.1.

9.1.3 Per Man Dollar Inputs (04XXX and 05XXX)

If cost estimating relationships based on the number of military men can be established, the model can accept MFU inputs for the estimation of the costs for any of the established categories. Costs may be estimated on the basis of either the <u>average</u> number of military men or the <u>incremental</u>

military men. The average is computed on the basis of the beginning and ending year-end strength. The incremental cost is applied to the net increase, if any, in end strength over the end strength of the previous year. To enter either kind of per man cost factor in a major force unit the following procedure is appropriate:

(a) Identify the kind of cost involved in terms of cost and budget categories. The final three digits of the data code will be taken from the list included in Section 9.3.

(b) Determine the appropriate estimating relationship. If it is to be "per average military man," prefix the selected 3 digits with "04;" if it is to be "per incremental military man," prefix the selected 3 digits with "05."

(c) Determine the appropriate format code.

(d) Enter the factors, which may be varied by year if desired. These rates will apply to the selected manpower, as adjusted, in the entire major force unit.

9.2 BFU DOLLAR INPUTS

BFU dollar inputs are of two types:

(a) Materiel Annex Dollar Inputs, code 02XXX

(b) Per unit cost factors, code 06XXX or 07XXX.

9.2.1 BFU Materiel Annex Dollar Inputs (02XXX)

See the description of MFU materiel annex thruputs in Section 9.1.2. The procedure for BFU's is the same, except that the inputs are entered on a per BFU basis. An example is shown on the Input Sheet II included in Section 13.1, where "REDEYE OTHER" costs of $73,600 and $12,400 per battalion are entered and coded as "02138."

9.2.2 Per Unit Cost Inputs (06XXX and 07XXX)

Cost factors per basic force unit can be expressed either as costs per average unit or per incremental unit. BFU inputs of this type must be constant over time; they cannot be varied by year. For an input of this type the procedure is:

(a) Identify the appropriate final three digits of the data code, using the list in Section 9.3 and considering the cost and budget categories involved.

(b) Determine the appropriate estimating relationship. If it is to be "per average unit," prefix the selected 3 digits with "06;" if it is to be "per incremental unit," prefix them with "07."

(c) Determine the appropriate format code.

(d) Enter the unit cost in the space for year N-1, columns 13-17. As noted previously, the per unit cost must be constant over time.

An example of this procedure is shown on Input Sheet II in Section 13.1. The Major Overhaul and Maintenance (BP 2300) has been determined to be $160,000 per year per battalion. The final digits "660" are from the list in Section 9.3 and the prefix "06" shows that the average number of units is to be used. In the year N+1, for example, the illustration Input Sheet I shows that there will be an average of 3 of BFU 20350 included in MFU 13010.

The costs calculated on a per unit basis, as well as per man costs developed at the MFU level, will be summarized with costs entered with the same final three digits. The aggregates will appear in the outputs as 03XXX costs.

9.3 COST CATEGORY CODES

Dollar inputs in each case are identified by a five digit data code, in columns 7 through 11, in which the first digit is zero, the second digit shows the kind of cost estimating relationship, and the last three digits identify the particular cost element. The allowable second digits, as described in Sections 9.1 and 9.2 are:

(a) 2 = Materiel Item Dollar Inputs, for Materiel Annex

(b) 3 = Dollar Inputs, Totals

(c) 4 = MFU Cost Per Average Military Man

(d) 5 = MFU Cost Per Incremental Military Man

(e) 6 = Cost Per Average BFU

(f) 7 = Cost Per Incremental BFU

The final three digits can be selected from Table 9.1 in which "X" represents the digit 3, 4, 5, 6, or 7, as appropriate. Those cost categories coded 03XXX must be entered in that form, i.e., the second digit is always 3. If a new cost category is to be established, a new code will be needed (see Section 13.2.5 of this manual).

Table 9.1

COST CATEGORY CODES

COST ELEMENTS	X = 3, 4, 5, 6, 7	CODES
Total		03000
Research & Development, Total		03100
RDT&E (BA 2040)		0X110
Mil. Const., Research Facil. (BA 2050)		0X150
Investment, Total		03200
Construction		03210
Mil. Const., Army (BA 2050)		0X214
Mil. Const., ARNG (BA 2085)		0X216
Mil. Const., Army Reserve (BA 2086)		0X218
PEMA (BA 2030)		0X230
O&M (BP 2200)		0X250
Training, Total Initial		03270
Mil. Const., Army (BA 2050)		0X272
PEMA (BA 2030)		0X274
Mil. Pers. (BA 2010)		0X276
O&M (BP 2100)		0X278
Operations, Total		03600
PEMA (BA 2030)		0X610
Promotion of Rifle Practice (BA 1705)		0X620
Military Personnel		03630
Military Pers., Army (BA 2010)		0X632
Military Pers., Army Reserve (BA 2070)		0X634
Military Pers., ARNG (BA 2060)		0X636
Operations & Maintenance		03650
O&M, Family Housing (BP 1900)		0X654
O&M, Operating Forces (BP 2000)		0X656
O&M, Central Supply (BP 2200)		0X658
O&M, Major Overhaul & Maint. (BP 2300)		0X660
O&M, Medical Activities (BP 2400)		0X662
O&M, Army Wide Activities (BP 2500)		0X664
O&M, Army Reserve & ROTC (BP 2600)		0X668
O&M, Joint Projects (BP 2700)		0X670
O&M, Intelligence Activities (BP 2800)		0X672
O&M, Comm. & Pictorial Serv. (BP 2900)		0X674
O&M, ARNG (BA 2065)		0X676
Training, Total Annual		03680
Military Const., Army (BA 2050)		0X682
PEMA (BA 2030)		0X684
Military Pers. (BA 2010)		0X686
O&M (BP 2100)		0X688

Chapter 10

OUTPUT PROCEDURES

This chapter describes the output reports which are available from the model and outlines the procedures for obtaining desired outputs. The sections are as follows:

10.1 TYPES OF OUTPUT AVAILABLE
- 10.1.1 "User" Reports
- 10.1.2 Analytical Reports

10.2 OUTPUT AGGREGATIONS
- 10.2.1 Levels of Aggregation
- 10.2.2 Aggregation Element Inputs
- 10.2.3 Aggregation Titling
- 10.2.4 Determining the Output Report
- 10.2.5 Identifying the Output Report

10.3 EVALUATION OF RESULTS
- 10.3.1 Checkout of Base Case Runs
- 10.3.2 Checkout of Alternative Forces

10.4 COMMUNICATION OF RESULTS

10.1 TYPES OF OUTPUT AVAILABLE

The total output of the model is substantial and is divided into "user" reports and analytical reports. The user reports are the output reports which the operator may want to furnish to the user who requests the costing of an alternative force. The user reports contain the "English" associated with each 5 digit identification or code number which appears in the reports to inform the user that, for example, code "31229" is a "Rifle 7.62mm M14." The analytical reports are reports which assist the operator in his work and do not convert code numbers into English.

10.1.1 "User" Reports

The user reports are divided as follows:

(a) Cost and Personnel Summaries

- Total all Programs and Program totals
- Mission/area totals
- Program Element totals
- Major force unit totals
- Aggregations of major force units (see Section 10.2).

(b) Materiel Annex

- Total Force
- Major force unit totals.

The cost and personnel summaries contain TOA for each fiscal year by cost category and by budget account. They also contain year-end personnel strengths. The model materiel annex contains procurement and delivery schedules for every materiel item by fiscal year and the dollar amounts associated with the procurement and delivery quantities.

Table 10.1 presents a sample cost and personnel summary for a major force unit. Table 10.2 presents a sample materiel annex.

Any or all output reports can be produced by the computer program. It may not be necessary to have every report printed each time that a model run is made. For example, if the user is interested only in the cost by Program for several alternative forces, the operator may decide to include the mission/area totals and Program Element totals as backup information but to omit the major force unit report as not essential for evaluation of the Program costs for the alternative forces. Ground rules cannot be established to tell the operator when to omit a report; each run will have its own determining factors.

TABLE 10.1

SAMPLE OUTPUT - MFU COST & PERSONNEL SUMMARY

ARMY COST MODEL - SAMPLE OUTPUT — RUN 1234 — 03/13/63 — PAGE 45

MAJOR FORCE UNIT 13992 — HYPOTHETICAL BATTALIONS — M/A EUROPE — SHEET 1

FORCE STRUCTURE-NUMBER OF UNITS, Y.E.

	FISCAL YEAR 1963	1964	1965	1966	1967	1968	1969	1970	1971	1972
TOTAL Y.E. BNS	3	4	5	6	7	7	7	7	7	7

		FISCAL YEAR 1963	1964	1965	1966	1967	1968	1969	1970	1971	1972
TOTAL MILITARY PERSONNEL (Y.E.)		17,126	18,674	19,768	20,403	21,308	21,308	21,308	21,308	21,308	21,308
OFFICERS		1,384	1,743	1,986	2,183	2,310	2,310	2,310	2,310	2,310	2,310
ENLISTED		15,742	16,931	17,782	18,220	18,998	18,998	18,998	18,998	18,998	18,998
TOTAL CIVILIAN PERSONNEL (Y.E.)		1,773	2,183	2,416	2,580	2,759	2,759	2,759	2,759	2,759	2,759
DIRECT HIRE		321	462	462	462	462	462	462	462	462	462
CONTRACT FOREIGN NATIONAL		1,452	1,721	1,954	2,118	2,297	2,297	2,297	2,297	2,297	2,297
TOTAL OBLIGATIONAL AUTH. (MIL.$)		465.3	489.6	517.5	539.7	563.0	545.9	545.9	545.9	545.9	545.9
RESEARCH AND DEVELOPMENT		1.2	.8	.2	*	.0	.0	.0	.0	.0	.0
RDT/E	(BA 2040)	1.2	.8	.2	*	.0	.0	.0	.0	.0	.0
INVESTMENT		141.8	150.5	159.0	168.8	177.4	159.0	159.0	159.0	159.0	159.0
MILITARY CONSTRUCTION		8.2	9.5	10.4	11.1	11.8	11.8	11.8	11.8	11.8	11.8
ARMY	(BA 2050)	8.2	9.5	10.4	11.1	11.8	11.8	11.8	11.8	11.8	11.8
PEMA	(BA 2030)	123.4	128.9	134.2	141.1	147.2	147.2	147.2	147.2	147.2	147.2
TRAINING INITIAL		10.2	12.1	14.4	16.6	18.4	.0	.0	.0	.0	.0
MIL. CONST.	(BA 2050)	.4	.6	.8	1.0	1.2	.0	.0	.0	.0	.0
PEMA	(BA 2030)	.8	1.0	1.3	1.7	2.1	.0	.0	.0	.0	.0
MIL. PERS.	(BA 2010)	5.4	6.2	7.1	8.3	9.2	.0	.0	.0	.0	.0
OP. AND MAINT.	(BP 2100)	3.6	4.3	5.2	5.6	5.9	.0	.0	.0	.0	.0
OPERATIONS		322.3	338.3	358.3	370.9	386.9	386.9	386.9	386.9	386.9	386.9
MILITARY PERSONNEL		186.3	191.8	203.4	209.2	217.1	217.1	217.1	217.1	217.1	217.1
ARMY	(BA 2010)	186.3	191.8	203.4	209.2	217.1	217.1	217.1	217.1	217.1	217.1
OPERATIONS AND MAINT		104.5	108.0	110.5	113.5	117.5	117.5	117.5	117.5	117.5	117.5
OPERATING FORCES	(BP 2000)	96.2	99.1	100.9	103.4	106.7	106.7	106.7	106.7	106.7	106.7
MAJOR OVERHAUL	(BP 2300)	8.3	8.9	9.6	10.1	10.8	10.8	10.8	10.8	10.8	10.8
TRAINING ANNUAL		31.5	38.5	44.4	48.2	52.3	52.3	52.3	52.3	52.3	52.3
MIL. CONST.	(BA 2050)	1.2	1.8	2.1	2.5	2.7	2.7	2.7	2.7	2.7	2.7
PEMA	(BA 2030)	2.4	3.6	4.2	5.0	5.4	5.4	5.4	5.4	5.4	5.4
MIL. PERS.	(BA 2010)	18.2	22.9	27.2	30.2	31.9	31.9	31.9	31.9	31.9	31.9
OP. AND MAINT.	(BP 2100)	9.7	10.2	10.9	11.5	12.3	12.3	12.3	12.3	12.3	12.3

TABLE 10.2

SAMPLE OUTPUT-MATERIEL ANNEX

ARMY COST MODEL - SAMPLE OUTPUT RUN 1234 03/13/63 PAGE 46

MATERIEL ANNEX ITEM		FISCAL YEAR 1963	1964	1965	1966	1967	1968	1969	1970	1971	1972
REDEYE MISSILE	TOA (MIL. $)	1.6	10.8	18.1	7.9	.0	.0	.0	.0	.0	.0
	QTY (UNITS)	251	2,428	5,886	3,072	0	0	0	0	0	0
	DEL (MIL. $)	.0	.7	9.9	19.1	8.9	.0	.0	.0	.0	.0
	QTY (UNITS)	0	55	2,014	6,160	3,413	0	0	0	0	0
REDEYE - OTHER	TOA (MIL. $)	.2	1.0	.6	.0	.0	.0	.0	.0	.0	.0
GUN MACHINE CAL .50 M85	TOA (MIL. $)	2.3	7.1	11.3	11.3	9.9	.5	.5	.5	.5	.4
	QTY (UNITS)	969	2,962	4,690	4,700	4,103	206	206	206	206	186
	DEL (MIL. $)	1.9	1.8	6.7	11.3	11.3	11.0	.5	.5	.5	.5
	QTY (UNITS)	801	768	2,770	4,687	4,718	4,536	206	206	206	206
RIFLE 7.62MM	TOA (MIL. $)	10.9	9.4	9.0	6.6	1.7	.9	.9	.9	.9	.9
	QTY (UNITS)	96,964	83,915	80,741	58,720	15,388	8,403	8,399	8,399	8,399	8,399
	DEL (MIL. $)	10.6	10.9	9.1	9.0	6.2	.9	.9	.9	.9	.9
	QTY (UNITS)	94,820	97,343	81,545	80,599	54,859	8,423	8,399	8,399	8,399	8,399
TRUCK UTILITY 1/4 TON M151	TOA (MIL. $)	17.6	13.4	16.3	14.7	13.7	13.9	8.3	8.3	8.3	7.9
	QTY (UNITS)	5,313	4,051	4,942	4,441	4,141	4,202	2,500	2,500	2,500	2,375
	DEL (MIL. $)	5.7	17.8	13.2	16.4	14.7	13.7	14.2	8.3	8.3	8.3
	QTY (UNITS)	1,729	5,382	4,003	4,967	4,457	4,134	4,292	2,500	2,500	2,500
CTG 7.62MM NATO ALL TYPES EXCEPT BLANKS	TOA (MIL. $)	8.6	10.6	12.2	12.9	12.6	12.6	12.6	12.6	12.6	12.6
	QTY (THOUS)	95,552	117,346	135,245	142,873	140,312	139,970	139,806	139,730	139,730	139,730
	DEL (MIL. $)	6.6	9.1	10.9	12.5	13.0	12.5	12.6	12.6	12.6	12.6
	QTY (THOUS)	73,406	101,089	121,410	138,703	143,915	139,411	140,109	139,730	139,730	139,730
CHG PROP M51E1 FOR 155MM PROJ	TOA (MIL. $)	1.7	2.5	2.5	.7	.0	.0	.0	.0	.0	.0
	QTY (UNITS)	43,127	61,610	61,610	18,483	0	0	0	0	0	0
	DEL (MIL. $)	.0	2.5	2.5	2.5	.0	.0	.0	.0	.0	.0
	QTY (UNITS)	0	61,610	61,610	61,610	0	0	0	0	0	0

10.1.2 Analytical Reports

The analytical reports are designed as tools to aid the operator in his work and not as reports which the user normally will require. Therefore, the analytical reports are almost devoid of any English translation of the codes used in the model. For example, the analytical outputs will have only the code "31229" for a materiel item but will not have "Rifle 7.62mm M14."

The analytical reports of the model are:

a) Two "Regular" reports

- Materiel delivery schedules and personnel training workloads by mission/area.
- Year-end assets and deliveries for materiel, and personnel end-strengths, by Program.

b) Special analytical reports (examples)

- Materiel initial allowances by Program, mission/area, and/or major force unit.
- Stocks (maintenance float and/or combat consumption) by Program, mission/area, and/or major force unit.

The regular reports are programmed already and generally are printed every time a model run is made. The other special analytical reports can be made available to the operator with little reprogramming effort by the ADP operator. When the operator decides that he has a need for some output report, he should consult with the ADP operator to determine whether the output report can be programmed.

The classification of these reports as "analytical" reports and not as user reports does not mean that they cannot be made available

to the user, if he has a need for them.

10.2 OUTPUT AGGREGATIONS

10.2.1 Levels of Aggregation

There are many major force unit aggregations possible, although some are more useful than others. The list of these aggregation types, which are discussed below, is included to indicate the range of possibilities which exist.

(a) Program Element Aggregations. Major force units may be aggregated to present outputs by Program Element. Although some major force units are equivalent to Program Elements (e.g., HAWK Battalions - Europe), others must be combined to form a Program Element. For example, Program Element "Missile Commands - Europe" is composed of the follow major force units:

MFU No.	Name	TOE
13082	Missile Command - F.A. Missile Battalion, Corporal	6-545E
13084	Missile Command - F.A. Missile Battalion, Sergeant	6-555T
13086	Missile Command - Aviation Company, Surveillance	1-37T
13088	Missile Command - Other	

(b) Mission/Area Aggregations. Mission/area aggregations are produced by aggregating each major force unit within the mission/area. Table 10.3 contains the twelve mission/area aggregations possible in the Mark I model. In the left hand column the beginning and ending major force units within each aggregation are indicated. Five of these

Table 10.3

MARK I COST MODEL MISSION/AREA AGGREGATIONS

MFU No's	Mission/Area Aggregation
12002 to 12008	ARADCOM
13000 to 13132	Europe
13134 to 13210	Pacific
13212 to 13242	Alaska
13244 to 13264	Caribbean
13266 to 13388	STRAC
13390 to 13474	Other STRAF
13476 to 13476	Unallocated Program III
14002 to 14002	Army Port Terminals
15002 to 15008	Reserve and Guard
16002 to 16032	Research and Development
17002 to 17014	General Support

aggregations, ARADCOM, Army Port Terminals, Reserve and Guard, Research and Development and General Support are equivalent to Army Programs and reports for them can be prepared as described in Section 10.1.

(c) Functionally Related Major Force Unit Aggregations. In both this and the next type of aggregation discussed, the elements of the aggregation may be drawn from across Program Element lines. Functionally related major force units are aggregated mainly to examine total resource implications of units engaged in similar roles. Table 10.4 contains two examples of functionally related major force unit aggregations.

Elements of the aggregation may be single major force units as in Example A, or may be sequences of major force units as in Example B. Note that Example A crosses three Program lines, II, III & V and that Example B crosses Program Element lines.

(d) Unrelated Major Force Unit Aggregations. When required, as perhaps for special studies, completely unrelated major force units may be aggregated. Any combination of major force units, or, for that matter, combination of aggregations may be achieved depending on the output reports desired.

Only the free form input sheet may be employed for entering major force unit aggregations. There are four distinct steps involved in preparing aggregation inputs. These steps are discussed in the following sections in order of their employment: 10.2.2 - Aggregation Element Inputs; 10.2.3 - Aggregation Titling; 10.2.4 - Determining the Output Report; 10.2.5 - Identifying the Output Report.

Table 10.4

SAMPLE MAJOR FORCE UNIT AGGREGATIONS

Example A

Aggregation: NIKE HERCULES - World-Wide

	MFU No.	Name
Components:	12002	NIKE HERCULES Battalions - ARADCOM
	13064	" " " Europe
	13166	" " " Pacific
	13228	" " " Alaska
	13342	" " " STRAC
	13406	" " " Other STRAF
	15002	" " ARNG

Example B

Aggregation: Armored Divisions - World-Wide

	MFU No.	Name
Components:	13020 to 13036	Armored Divisions - Europe
	13288 to 13304	" " STRAC

10.2.2 Aggregation Element Inputs

Elements of the aggregation may be one or more major force units, each of which must be included in the inputs to provide a complete aggregation. These major force units are entered on the input sheet by their identifying number which may be found in either the Inverse or the Standard Input Listing under the heading "Major Force Unit Names." The entering of aggregation element numbers is performed in one of the following two manners:

(a) Sequential Major Force Units. When the aggregation includes a sequence of major force units the entire sequence may be entered by placing the lowest identification number of the sequence in columns 1 through 5 and the highest number in columns 7 through 11. To illustrate, Program Element "Missile Commands - Europe" which consists of a sequence of four major force units, 13082, 13084, 13086 and 13088, is entered on the input sheet as shown in Figure 10.1. For purposes of illustration, the examples of input sheets in Figures 10.1 - 10.7 are blocked off into the standard "ID-M/A-Code-Format" columns characteristic of the model coding structure. This was done for purposes of uniformity, although the terms "ID", "M/A", and "Code" are not meaningful in the case of the aggregation procedure discussed in this Section (10.2).

IDENT					M/A	CODE					FORMAT							
01	02	03	04	05	06	07	08	09	10	11	12	13	14	15	16	17	18	19
1	3	0	8	2		1	3	0	8	8								

Figure 10.1
Sequential Major Force Unit Entry:
Program Element Aggregation "Missile Commands - Europe"

(b) Non-Sequential Major Force Units. When the aggregation includes a single major force unit or major force units not in sequence, the identifying number of each unit is placed first in columns 1 through 5 and again in columns 7 through 11. As an example, the aggregation of World-Wide NIKE HERCULES units would be entered as in Figure 10.2.

ID					M/A CODE						FORMAT								
01	02	03	04	05	06	07	08	09	10	11	12	13	14	15	16	17	18	19	20
1	2	0	0	2		1	2	0	0	2									
1	3	0	6	4		1	3	0	6	4									
1	3	1	6	6		1	3	1	6	6									
1	3	2	2	8		1	3	2	2	8									
1	3	3	4	2		1	3	3	4	2									
1	3	4	0	6		1	3	4	0	6									
1	5	0	0	2		1	5	0	0	2									

Figure 10.2
Non-Sequential Major Force Unit Entries:
Functionally Related MFU Aggregation
"NIKE HERCULES - World-Wide"

Both of the above methods may be used in the same aggregation when it is necessary to combine sequential and non-sequential units.

10.2.3 Aggregation Titling

Each aggregation requires a title to identify it from other aggregation reports. Two methods are employed for entering aggregation titles:

(a) Titles are entered in line with single or sequential major force unit inputs for Program Element and mission/area aggregations. (Figure 10.3).

(b) Titles are entered as separate line entries for non-sequential major force units aggregations. (Figure 10.4)

Figure 10.3 below shows how titles are entered for aggregations of Program Element "Missile Commands - Europe" and Mission/Area "Army Port Terminals."

ID	MIA	CODE	Format	
01 02 03 04 05	06	07 08 09 10 11	12	13 14 15 16 17 18 19 20 21 22 23 24 25 26 27 28 29 30 31 32 33 34 35 36 37 38
13082		13086	F	MISSILE CØMMANDS - EURØPE
14002		14002	F	ARMY PØRT TERMINALS

Figure 10.3
Program Element and Mission/Area Aggregation Title Entries

As illustrated in Figure 10.3, all title entries must be preceded by the letter "F" in column 12 to indicate that textual entries follow.

Aggregations of two or more Program Elements or mission/areas must receive separate title entries as for non-sequential major force unit aggregations.

Inputs for separate title entries as mentioned in (b) above are prepared as follows: (1) Enter zeros in columns 1 through 5 and 7 through 11; (2) enter "F" in column 12; (3) enter title in columns 13 through 72. Elements for the aggregation are then listed below the title entry.

Figure 10.4 illustrates the title entry for an aggregation of NIKE HERCULES Units on a World-Wide basis.

ID					MIA	CODE					FORMAT																									
01	02	03	04	05	06	07	08	09	10	11	12	13	14	15	16	17	18	19	20	21	22	23	24	25	26	27	28	29	30	31	32	33	34	35	36	37	38
0	0	0	0	0		0	0	0	0	0	F	N	I	K	E		H	E	R	C	U	L	E	S		-		W	Ø	R	L	D		W	I	D	E

Figure 10.4

Non-Sequential MFU Title Entries
(Aggregation Elements not Shown)

10.2.4 Determining the Output Report

An output report may consist of one or more aggregations depending on the array of aggregations desired. In order to end one report and proceed with the next, an "end of report designator" is employed to allow the separate display of each report. The end of an output report is designated by entering nines in columns 1 through 5 and 7 through 11. To avoid confusing these entries with aggregation entries, it is advisable to print "END OF REPORT" starting in column 13. The operator must define the content of each output report desired.

Figure 10.5 illustrates how separate reports are entered on the input sheet to provide the desired output display. It is assumed that the following three separate output reports are required:

Report #1 a. Infantry/Mechanized Brigades - ALASKA
b. Aviation Companies - ALASKA

	ID					M/A	CODE					Format																													
	01	02	03	04	05	06	07	08	09	10	11	12	13	14	15	16	17	18	19	20	21	22	23	24	25	26	27	28	29	30	31	32	33	34	35	36	37	38	39	40	41
Report #1	1	3	2	1	2		1	3	2	2	6	F	I	N	F	/	M	E	C	H		B	R	I	G	A	D	E	S	-	A	L	A	S	K	A					
	1	3	2	3	0		1	3	2	3	6	F	A	V	I	A	T	I	Ø	N		C	Ø	M	P	A	N	I	E	S	-	A	L	A	S	K	A				
	9	9	9	9	9		9	9	9	9	9		E	N	D		Ø	F		R	E	P	Ø	R	T																
Report #2	1	3	2	3	0		1	3	2	3	6	F	A	V	I	A	T	I	Ø	N		C	Ø	M	P	A	N	I	E	S	-	A	L	A	S	K	A				
	1	3	0	8	2		1	3	0	8	6	F	M	I	S	S	I	L	E		C	Ø	M	M	A	N	D	S		-		E	U	R	Ø	P	E				
	9	9	9	9	9		9	9	9	9	9		E	N	D		Ø	F		R	E	P	Ø	R	T																
Report #3	1	3	0	8	2		1	3	0	8	6	F	M	I	S	S	I	L	E		C	Ø	M	M	A	N	D	S		-		E	U	R	Ø	P	E				
	0	0	0	0	0		0	0	0	0	0	F	N	I	K	E		H	E	R	C	U	L	E	S		-		A	C	T	I	V	E		A	R	M	Y		
	1	3	0	6	4		1	3	0	6	4																														
	1	3	1	6	6		1	3	1	6	6																														
	1	3	2	2	8		1	3	2	2	8																														
	1	3	3	4	0		1	3	3	4	0																														
	1	3	4	0	6		1	3	4	0	6																														
	9	9	9	9	9		9	9	9	9	9		E	N	D		Ø	F		R	E	P	Ø	R	T																

Figure 10.5

Use of Output Report Designators

Report #2 a. Aviation Companies - ALASKA
b. Missile Commands - Europe

Report #3 a. Missile Commands - Europe
b. NIKE HERCULES - Active Army

Some care must be taken in arranging aggregations within each report. When a report combines single line entry aggregations and aggregations requiring separate title entries, the single line entry aggregation must be entered first. This is illustrated in Figure 10.5 where "Missile Commands - Europe" is entered before "NIKE HERCULES-Active Army." However, if it is necessary to arrange the aggregations within a report otherwise, the arrangement can be accomplished by making a separate title entry for the single line aggregation. To illustrate, Figure 10.6 shows Report #3 with the aggregations reversed. The title thus entered prevents the two aggregations from being presented as a single aggregation.

ID					M/A	CODE					FORMAT																												
01	02	03	04	05	06	07	08	09	10	11	12	13	14	15	16	17	18	19	20	21	22	23	24	25	26	27	28	29	30	31	32	33	34	35	36	37	38	3
0	0	0	0	0		0	0	0	0	0	F	N	I	K	E		H	E	R	C	U	L	E	S		-		A	C	T	I	V	E		A	R	M	Y
1	3	0	6	4		1	3	0	6	4																												
1	3	1	6	6		1	3	1	6	6																												
1	3	2	2	8		1	3	2	2	8																												
1	3	3	4	0		1	3	3	4	0																												
1	3	4	0	6		1	3	4	0	6																												
0	0	0	0	0		0	0	0	0	0	F	M	I	S	S	I	L	E		C	Ø	M	M	A	N	D	S		-		E	U	R	Ø	P	E		
1	3	0	8	2		1	3	0	8	6																												
9	9	9	9	9		9	9	9	9	9		E	N	D		Ø	F		R	E	P	Ø	R	T														

Figure 10.6
Report #3 with Aggregations Reversed

10.2.5 Identifying the Ouput Report

(a) Column 74 Indicator. In order to distinguish aggregation procedures from other inputs, each entry of an aggregation must be identified with an "A" in column 74. This "A" will be entered for each aggregation element as well as for title entries and end of report designators.

(b) Report Number. Each output report must be assigned a number to distinguish it from other reports. This number remains with the report and serves to identify the "aggregation deck" (punched cards) each time it may be used to provide an output. Once several reports have been run it will be necessary to institute certain bookkeeping procedures to record the reports and their aggregations for future reference and application.

The report number is a three digit number and is placed in columns 75 through 77. A report number is entered for aggregation elements including title entries and end of report designators. Report numbers may be assigned on a random basis as long as they are recorded.

(c) Sequence Number. Each aggregation within a report is assigned a sequence number. This sequence number not only permits the display of each aggregation but also determines the order of display. Sequence numbers are assigned in ascending order, however, not necessarily in sequence. Gaps may be left in a series of sequence numbers to allow for the insertion of aggregations introduced later. The sequence number

is a three digit number which is entered in columns 78 through 80.

The sequence number for the end of report entry requires special handling. In every case, nines are entered in the appropriate field. Because nine is the highest number possible in the field, it allows any lower number to be entered within the report.

Report Numbers 1, 2 and 3 shown in Figures 10.5 and 10.6 are used again in Figure 10.7 to illustrate the entering of the aggregation designator, the report number and the sequence number.

10.3 EVALUATION OF RESULTS

The responsibility of the model operator includes the making of checks to insure against errors in the preparation of inputs and to insure, to the extent possible, that results are consistent with the original statement of the problem. Procedures for checkout and evaluation should be established by the operating group; the suggestions in this section of the manual are intended as guidelines. Somewhat different procedures will be required depending on whether the run to be checked is a new base case run or an alternative being costed for a user.

10.3.1 Checkout of Base Case Runs

New runs of the base case normally will be required from time to time as inputs are revised and updated (see Chapter 11 for a discussion of updating). Each time a new run of the base case is made, it should be thoroughly checked. A rigorous check of all new inputs should be made to insure accuracy and completeness. Normally, it will

ID (01–05)	N/A (06)	CODE (07–11)	FORMAT (12)	13–40	72	73	74	75–80
13212		13226	F	INF/MECH BRIGADES-ALASKA			A	001005
13230		13236	F	AVIATION COMPANIES-ALASKA			↓	001010
99999		99999		END ØF REPORT			↓	001999
13230		13236	F	AVIATIØN COMPANIES-ALASKA			↓	005001
13082		13086	F	MISSILE CØMMANDS - EURØPE			↓	005002
99999		99999		END ØF REPØRT			↓	005999
13082		13086	F	MISSILE COMMANDS - EURØPE			↓	006010
00000		00000	F	NIKE HERCULES - ACTIVE ARMY			↓	006015
13064		13064					↓	006015
13166		13166					↓	006015
13228		13228					↓	006015
13340		13340					↓	006015
13406		13406					↓	006015
99999		99999		END ØF REPØRT			A	006999

Figure 10.7

Reports Number 1, 2, and 3 Showing Completed Inputs

suffice to check only those inputs which were changed from the previous run of the base case.

The output of a new base case should be checked against other available data on the approved program, e.g., the Program Submissions[3] to OSD. Checks should be performed on manpower as well as budget appropriations at all levels for which reliable "benchmark" data on the approved program can be obtained. Manpower checks might be made for the total force, by Program, by mission/area, and by Program Element. Appropriation totals (PEMA, O&M, etc.) should be checked at least down to the Program level.

In comparing model output with other data sources, care must be taken to insure that the data are comparable. For example, if the model output is to be compared to the Program Submissions[3], certain adjustments are necessary in training costs and costs for BP 2300, "Major Overhaul," to insure consistency of treatment. The model allocates training costs to force units, whereas training costs in the Submissions[3] are included in Program VII. A similar situation exists for BP 2300 - the model allocates a higher proportion of BP 2300 costs to force units than is done in the Submissions[3].

When discrepancies are found, the operator must take steps to determine the cause. For example, if the MPA totals for the model were significantly different from those in other sources for the approved program, and it were established that the model totals were in error, the trouble might be traced to inaccurate or incorrectly

applied pay and allowance factors.

10.3.2 Checkout of Alternative Forces

Checks on runs of alternative forces will differ from those made on the base case for two principal reasons: (1) there probably will be no data from other sources with which to compare the model results, and (2) time constraints probably will be more severe. With respect to the second reason, the necessity for rapid response to requests to cost alternative forces will preclude lengthy periods to evaluate results.

However, two kinds of checks should be performed on alternative forces to the extent that time will allow: First, inputs should be carefully checked before the run is made both to guard against clerical errors and to insure completeness; Second, output should be reviewed for "reasonableness" and to insure consistency with established Army policy. Checks on "reasonableness" should include examination of manpower and cost results at the Program and mission/area levels and, if possible, for all force units to which changes were made. Checks should be, primarily, inspection to detect gross inconsistencies, such as an increase in MPA costs while manpower is declining, or manpower totals which vary from those for the base case by more than the changes to the force would suggest. The checks to be made should be tailored individually to each run.

Materiel delivery schedules should be checked to insure reasonable consistency with Army procurement policy. Checks should include a

brief examination of the delivery schedule for each item to make certain that time-phasing is not unreasonable (e.g., deliveries are not made all in one year) and to insure that delivery rates are not grossly inconsistent with those which actually might be attainable.

The checks suggested above are by no means the only ones which should be made; they are intended to serve as examples. The important point is that the operator has a responsibility for evaluation and checkout to insure to the extent possible that results are consistent with the statement of the problem obtained from the user. Procedures should be estalbished to make the necessary checks.

10.4 COMMUNICATION OF RESULTS

Previous sections of this chapter have described the reports which can be obtained using the model, and the review of such reports by the operator. Although the reports described in Section 10.1.1 are considered to be user reports, the operator usually should assist the user by furnishing interpretive and summary service. The computer printouts are rather bulky, and the user should not be required to study them to find the general nature of the result.

No standard narrative report form can be prescribed, but the operator should prepare, for each computer run, a concise description of the result. This summary should be tailored to the known interest of the user and should highlight those aspects of the computer-prepared reports which are likely to be of interest.

Preparation of narrative reports should not become an involved process. Timely presentation of the main findings is of more

importance than perfection in the manner of presentation. The operator should review the computer-prepared reports and identify the significant deviations from the base case. Reports to the user on the results of costing alternative forces should emphasize differences rather than absolute amounts. A narrative summary might include a presentation such as the one shown in the following example:

INCREMENTAL COST OF ALTERNATIVE FORCES
INCREASE (DECREASE) OVER BASE CASE

	63	64	65	66	67	5 Year Total
Force A	100	150	250	250	200	950
Force B	(50)	(50)	200	500	750	1350
Force C	-	(50)	(100)	(100)	(100)	(350)

The narrative report should be delivered to the user along with the computer-prepared outputs which are deemed to be of interest to the user.

Chapter 11

UPDATING THE DATA BASE

The preceding chapters have dealt with procedures for changing inputs as part of the process of costing alternative forces. Such changes took the form of perturbations of the base case inputs. This chapter deals with changes and additions to the input data in order to keep it up to date. Such changes may be necessitated by changes in the approved base program or by the passage of time. Three different types of updating are discussed:

11.1 PERIODIC UPDATING

11.2 INPUTS FOR ADVANCED WEAPON SYSTEMS, ORGANIZATIONAL UNITS, AND HARDWARE ITEMS

11.3 CHANGING THE TIME PERIOD COVERED BY THE MODEL

11.1 PERIODIC UPDATING

This section deals with updating the existing inputs for the base case. As noted in Chapter 1, there is little difference from a procedural standpoint between changing the input data to update the base case and changing it as part of pricing an alternative force. Both processes require changes to the input data; the difference lies in the particular data to be changed and in the reasons for the changes. The discussion in this section will concern primarily which data to update and when to update; the procedural aspects of making the changes are covered adequately elsewhere in this manual.

The discussion in Chapters 3-9 was oriented primarily toward those inputs involved in step one of the costing process of the model: the specification of the force to be costed in terms of its time-phased requirements for personnel and materiel. The inputs required in step

two, the application of costing relationships and factors to the requirement statements, were mentioned only in certain special cases. This distinction appears because Chapters 3-9 were designed to deal primarily with procedures for operating the model, or pricing alternative forces, and it is those inputs involved in the specification of requirements which are likely to vary from one alternative to another. Costing relationships and factors, such as pay and allowance factors or materiel lag factors, are not likely to vary from one force to another and hence were not discussed in Chapters 3-9.

However, all inputs require updating. Some inputs require revision more frequently than others, but all should be reviewed periodically. The establishment of updating as an integral part of model operation, with specified procedures to be performed on a regular schedule, is more important than the particular frequency chosen for the review of each input.

Updating should be viewed as a program of periodic maintenance of the input data. The responsibility for updating the input data should be assigned to the group which operates the model and viewed by the operating group as equal in importance to the function of pricing alternative forces. Regular schedules should be established for review of each input or class of inputs and control procedures should be adopted to insure that updating is accomplished in an orderly fashion.

The optimum frequency for review and updating of any input will depend on the nature of the data, the rate at which the data are changed or become obsolescent, and the frequency with which new source data can be obtained. The three tables which follow illustrate possible frequencies

for the updating of inputs. The particular frequencies shown are merely suggestions. The optimum schedule can best be established after some operating experience with the model has been obtained.

11.2 INPUTS FOR ADVANCED WEAPON SYSTEMS, ORGANIZATIONAL UNITS, AND HARDWARE ITEMS

Successful operation of the Army Cost Model will require input data in addition to that included in the base case. In order to price alternative forces, it is necessary that specifications be available for all weapon systems and organizational units, including their advanced hardware, which may be in the alternative force at any time during the period under consideration. The inputs necessary for introduction of new systems or units are discussed in Chapter 5, those for new hardware items in Chapter 6.

When an alternative force is to be costed, inputs for advanced systems and items must be developed rapidly if the model is to be utilized to its fullest potential. If several days or more are required to obtain data and develop inputs, the capability to cost alternative forces rapidly, one of the major advantages of an automated model, is compromised.

Therefore it is most important that adequate source data for development of inputs for advanced systems and hardware be readily accessible to the model operator. The data could be organized as a library or data bank specifically for support of cost model operations. Inputs for systems and hardware items commonly used in alternative forces could be prepared in advance and included on the input tape to be used as necessary.

Table 11.1

PERIODIC UPDATING OF BASE CASE INPUTS

Force Structure and Personnel

	TYPE OF INPUT	INPUT SHEET	SUGGESTED FREQUENCY	COMMENTS
Force	Force Structure	I	Three times annually	With Program Submissions
Personnel Inputs	MPU End-Strengths	II	Semiannually	The Troop Program; Allocation of Troop Bases to Program Elements
	Pay & Allowances	III D	Annually	
	Turnover Rate	III D	Annually	
	Training Cost	III D	Annually	
	Unspecified Personnel Allocation Schedule	III E	With changes to force structure	

Table 11.2 - PERIODIC UPDATING OF BASE CASE INPUTS

Materiel

	TYPE OF INPUT	INPUT SHEET	SUGGESTED FREQUENCY	COMMENTS
Material Inputs	Selection of Specified Items	N/A	Three times annually	With Program Submissions
	Initial Allowances	II	Semiannually	Also with TOE changes and/or changes to materiel basis of Issue.
	Phasing Schedules	III A	With changes to force structure and/or materiel basis of issue.	
	Unspecified Units Allowance Factor	III B	Annually	Army Materiel Plan
	Maintenance Float Factor	III B	With revisions of source data	SB 9-140, Field Maintenance Floats
	Combat Consumption Rate	III B	With revisions of source data	SB 710-1, Supply Control Replacement Factors
	Replacement/Consumption Rate	III B	With revisions of source data	SB 710-1, Supply Control Replacement Factors
	Ammunition Factors	III B	Annually	SB 38-26, Ammunition Day of Supply; Army Materiel Plan
	Cost Factors	III C	Constant costs: annually; variable costs: with changes in delivery requirements.	
	Lag Factors	III C	Annually	

Table 11.3

PERIODIC UPDATING OF BASE CASE INPUTS

Force and Run Constants and Other Inputs

	TYPE OF INPUT	INPUT SHEET	SUGGESTED FREQUENCY	COMMENTS
Force & Run Constants	Unspecified PEMA Items Cost Factor	IV A	With changes in materiel specifications	
	Training Cost Appropriation Allocation Rate	IV A	Annually	
	Days of Combat Stocks	IV A,B	With changes in logistics guidance	
	BP 2000 Cost Factors	IV A,B	Annually	
Other Inputs	Thruputs	I	Annually	Certain thruputs (e.g., R&D) more frequently if desired.
	Organizational Unit Maintenance Cost	II	Annually	Also with changes in mix of materiel.
	Replacement/Deficiency Construction Factor	III D	Annually	
	Unspecified PEMA Per-Man Factor	III D	With changes in materiel specification	

11.3 CHANGING THE TIME PERIOD COVERED BY THE MODEL

The output of the Army Cost Model covers a ten year period. Inputs are prepared for a twelve year period. The years are generalized on the input sheets and appear as N-1, N, N+1, ... N+10. The output covers the period N through N+9. The generalized years are translated into specific years in the output by specifying the base year N. Thus, if N is specified as 1963, the output covers the period 1963 - 1972. The base year N is specified as part of the computer program.

It will become necessary, from time to time, to change the period covered by the model. This change may become desirable when a new budget year arrives, or for making special purpose runs.

When the time period covered by the model is to be changed, a complete review of all input data which varies over time is required. This review is required because many of the yearly inputs apply to specific fiscal years, and a shift in the time frame requires a shift in the inputs backward or forward.

The inputs which should be reviewed and revised where necessary are only those yearly inputs which change over time. "No-year" data, and yearly data which are constant over time, do not require revision for a time shift. The inputs requiring a change can be located in the Input Listings. In most cases, the data will have to be shifted in time by an appropriate number of years. However, each input which varies over time should be examined and a determination made as to whether or not revision is required.

In addition to a review of inputs, a change in the time period covered by the model requires a change in the computer program to specify a new base year N.

Chapter 12

DOCUMENTATION

Documentation should be viewed as an integral part of cost model operation. Good documentation is necessary for several reasons: (1) it will provide a record of cost model operation for future reference; (2) it will facilitate training of personnel to operate the model; (3) it will record the evolution of the model as improvements are made; and (4) it will form a valuable source of cost information for use by consumers other than the model itself.

The detailed procedures established to govern documentation are in the province of Army administration. This section is presented to suggest considerations which should be taken into account in establishing and applying appropriate regulations and directives. The following sections are included:

12.1 DOCUMENTATION OF BASE CASE INPUTS

- 12.1.1 Data Sources and Methodology
- 12.1.2 Input Listings
- 12.1.3 Input Tapes

12.2 DOCUMENTATION OF RUNS OF ALTERNATIVE FORCES

12.3 DOCUMENTATION OF RESEARCH TO UPGRADE THE MODEL

12.1 DOCUMENTATION OF BASE CASE INPUTS

Updating the inputs for the base case was discussed in Chapter 11. This section presents some suggestions on documentation of the updating.

12.1.1 Data Sources and Methodology

A file should be established for each class or type of input (e.g., force structure, pay-and-allowance factors, etc.). The file should carefully document the data sources and methodology used in developing each type of input. As changes are made, they should be documented to become part of the historical record. In cases in which the volume of data is large (e.g., materiel initial allowances), the input listings will serve to document the inputs, with the documentation file reserved for sources and methodology.

12.1.2 Input Listings

The Input Listings are a vital part of documentation. They record the quantitative values of all inputs used in the model. As changes are made to base case inputs, the operator has the option of recording the changes in the Input Listings for the old base case using pen and ink, or requesting a new set of Input Listings. Pen and ink may suffice when the volume of changes is small. A file of Update Listings should also be maintained to document the changes to the input data for each run of the base case and for each alternative (see Section 13.5.5 for a discussion of the Update Listing).

12.1.3 Input Tapes

The input tape for each run includes all input data for the run. The necessity for careful maintenance of the input tape for the current base case is obvious, since it represents the departure point for alternative forces (see Section 3.2). The optimum length of time for keeping input tapes for outdated runs of the base case and for alternative forces will be a matter for determination after some operating experience has been gained.

12.2 DOCUMENTATION OF RUNS OF ALTERNATIVE FORCES

Documentation is also necessary for alternative forces costed at the request of a user. The documentation differs from that required for the base case in two ways: (1) only those inputs which were changed from base case values need be documented; and (2) careful documentation of the statement of the problem is required.

Documentation of the inputs for an alternative can be accomplished satisfactorily by means of the Update Listing and, if desirable, a complete set of Input Listings for the run. Documentation of results can be accomplished by means of the model output and the summary which is transmitted to the user (see Section 10.4).

Two other parts of the process of costing alternative forces also should be carefully documented: the statement of the problem received from the user, and the subsequent assumptions made by the model operators in translating the statement of the problem into model inputs. As suggested earlier in this manual, the model operator should make every effort to obtain as complete a specification of the problem as possible from the user. All communications with the user, both written and verbal, conducted as part of specifying the problem should be recorded carefully.

Even with extensive consultation with the user, it is likely that certain assumptions regarding force specification will be required of the model operator. For example, assumptions might be necessary regarding the manning of a particular unit (e.g., number of pilots) or the rate of

phase-in of new materiel in a particular area. Assumptions of this nature may be required when the necessary information is unavailable from the user for one reason or another, or in order to expedite the making of a run.

In many cases, results may be significantly sensitive to assumptions made by the model operator. Such assumptions should be documented carefully and made known to the user along with the results. The operator in effect says to the user: "Here are the results based upon these particular assumptions." The user is then free either to accept the assumptions as reasonable or to suggest a re-run of the problem under different assumptions. Since the latter outcome is a possibility, it is clearly advantageous for the operator to get the user to specify the assumptions he desires in detail before a run is made.

12.3 DOCUMENTATION OF RESEARCH TO UPGRADE THE MODEL

At the beginning of this manual (Section 1.4.2) the term upgrading was employed to include changes to model structure and changes in the form of the input data, as distinct from routine updating of the input data (Chapter 11). It has been assumed in this manual that research of the upgrading type would be performed by a group other than the model operators. However, the model operators will have certain responsibilities in the incorporation of changes to the model which result from this research.

Documentation of this research probably can be done best by those who conduct the research. The extent to which the model operators participate in the documentation will be a matter for future determination.

The important point is that the documentation must take place. Changes to the input data which do not require modifications of the model structure, such as training cost factors differentiated by personnel type, might be documented in a manner similar to that suggested in Section 12.1.1. Changes to the model structure, such as the introduction of activity rate calculations for maintenance costs, might be made in the form of addenda to Army Cost Model Structure and Flow,[4] which documents the structure of the Mark I model. Structural changes to the model will require modification of the computer program. These modifications should also be carefully documented.

Chapter 13

INPUT PROCEDURES

Chapters 3-9 discuss some of the most common types of costing problems which will confront the cost model operator. The discussion in those chapters is directed toward procedures for translating the statement of the costing problem into model inputs. This chapter describes the detailed mechanical procedures for coding and entering the input data onto input sheets prior to key punching. It is placed last in the manual because the level of detail presented is not required except by those directly responsible for operating the model. The following sections are included:

13.1 INPUT SHEETS

13.2 INPUT DATA CODING STRUCTURE
- 13.2.1 Identification Numbers
- 13.2.2 Data Codes
- 13.2.3 Format Codes
- 13.2.4 Code Assignments in the Mark I Model
- 13.2.5 Assigning New Code Numbers

13.3 PREPARATION OF INPUT SHEETS
- 13.3.1 Punched Card Layout
- 13.3.2 Allowable Characters
- 13.3.3 Illustration

13.4 INPUT LISTINGS
- 13.4.1 Standard Listing
- 13.4.2 Inverse Listing

13.5 INPUT CHANGE PROCEDURES
- 13.5.1 Additions
- 13.5.2 Deletions
- 13.5.3 Replacements
- 13.5.4 Conventions
- 13.5.5 Update Listings

13.6 DICTIONARY
- 13.6.1 Title Cards
- 13.6.2 Fixed Data
- 13.6.3 Cost Inputs
- 13.6.4 Requirements for a Change to the Dictionary

13.7 LEVEL OF INPUTS: THE MISSION/AREA
- 13.7.1 The Mission/Area "Tree"
- 13.7.2 Selection of Proper Input Level

13.1 INPUT SHEETS

There are twelve fixed form, or pre-printed, input sheets. All information to be used in the model must be entered on one of these sheets, which are listed and described below:

Input Sheet I - Major Force Unit Data

This input sheet is used to describe major force units. One input sheet is used for each major force unit. The description is in terms of composition by basic force units specified by years. Adjustment factors are available for adjusting materiel, personnel and other parameters.

Input Sheet II - Basic Force Unit Data

This input sheet is used to describe the basic force units. It includes the authorizations both for personnel and for materiel for each of twelve years. This same input sheet provides for adjustment factors for personnel and equipment for each year.

Input Sheet III A - Materiel Phasing Schedule

This input sheet is used to show the rate of phase-in of equipment by mission/area. It is used to identify the asset position (in terms of Standard A and substitute items) at the end of each year as a percentage of the initial allowances (TOE).

Input Sheet III B - Materiel Data

This sheet is used to identify those characteristics other than cost which are of significance in the model with respect to each specified materiel item. It identifies related materiel items, such

as ammunition, which are not listed on Input Sheet II and supplies the factors needed to compute the requirements when the inventories are known.

Input Sheet III C - Materiel Cost Data

This sheet is used to identify the unit cost and the appropriate lag factors for each specified equipment item.

Input Sheet III D - Military Personnel Data

This sheet is used, for each defined personnel class, to show the class characteristics which are important in the model. The factors are shown by year and by mission/area.

Input Sheet III E - Unspecified Unit Personnel Allocation Schedule

This sheet is used to enter information about the manning of combat support and other unspecified force units. On it are entered ratios, by mission/area, by year, and by personnel type which show the manning of the unspecified units as a percentage of the personnel of the specified units.

Input Sheet IV A - Army Wide Data

This sheet provides for certain costing factors to be used throughout the model. It also allows year by year adjustment of stockage factors.

Input Sheet IV B - Mission/Area Data

This sheet provides for the same data as that furnished on Input Sheet IV A, except for specific application within selected mission/areas.

Input Sheet IV C - Deliveries to TOA Schedules

This sheet provides for a series of different lag factor patterns, each with a reference code.

Input Sheet V A - Program Add/Change Data

This sheet is used to add to or change input data. It is designed to provide more convenience and flexibility than Input Sheets I through IV, but it performs the same function. Its use is discussed in Section 13.5.1.

Input Sheet V B - Program Delete Data

This sheet is designed for deleting input data. Input sheets I - IV cannot be used for deletions for reasons pointed out in Section 13.5.2 on deletion of data.

Samples of the input sheets are provided in Tables 13.1 through 13.12. Each input sheet, except V A and V B, contains an illustrative entry.

13.2 INPUT DATA CODING STRUCTURE

This section explains the coding structure used to enter all inputs into the model.

Each card has 80 columns which are grouped into fields as follows:

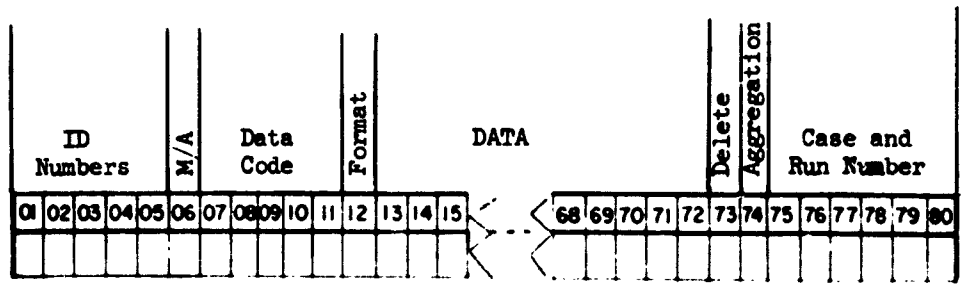

I

Table 13.1

MAJOR FORCE UNIT DATA

MAJOR FORCE UNIT NUMBER 13010 (ALL CARDS) MISSION/AREA K (ALL CARDS) RUN NUMBER 1

	CODE	FORMAT	
TITLE	00001	F	INF/MECH DIV - FA HOW 105/155 SP 6-1
SEC. DEF. NO.	00011	B	3.02.05.02.1

	CODE	FORMAT		N-1	N	N+1	N
FORCE STRUCTURE	00013	J	FA HOW 105/155/8" SP	8	8	10	
	00029	J					
	00045	J					

	CODE	FORMAT	
COMMENTS	00157	F	
	00167	F	
	00177	F	

FISCAL YEAR

	CODE	FORMAT	N-1	N	N+1	N+2	N+3	N+4	N+
FA BN HOW 105/155 SP 6-125D	20250	2	8	8	0				
FA BN HOW 105 SP 6-345E	20350	2			6	9	12		
FA BN HOW 155/8" SP 6-355E	20360	2			4	6	8		

ADJUSTMENT FACTORS	CODE	FORMAT	N-1	N	N+1	N+2	N+3	N+4	N+
OFFICER	00061	1							
ENLISTED	00073	1							
CIVILIAN	00085	1							
EQUIPMENT	00097	1							
RELATED EQUIPMENT	00109	1							
REPLACEMENT/CONSUMPTION	00121	1							
TRAINING CONSUMPTION	00133	1							
	00145	1							
	00187	1							

Table 13.1

MAJOR FORCE UNIT DATA

I

NUMBER 13010 (ALL CARDS) MISSION/AREA K (ALL CARDS) RUN NUMBER 00000 (ALL CARDS) PAGE 1 OF 1

FISCAL YEAR: N = 1965

CODE	FORMAT	
001	F	INF/MECH DIV - FA HOW 105/155 SP 6-125D/6-345E/6-355E
011	B	3.02.05.02.1

CODE	FORMAT		N-1	N	N+1	N+2	N+3	N+4	N+5	N+6	N+7	N+8	N+9	N+10
013	J	FA HOW 105/155/8" SP	8	8	10	15	20							
029	J													
045	J													

CODE	FORMAT	
157	F	
167	F	
177	F	

CODE	FORMAT	N-1	N	N+1	N+2	N+3	N+4	N+5	N+6	N+7	N+8	N+9	N+10
250	2	8	8	0									
350	2			6	9	12							
360	2			4	6	8							

CODE	FORMAT												
061	1												
073	1												
085	1												
097	1												
109	1												
121	1												
133	1												
145	1												
187	1												

I

Table 13.1

MAJOR FORCE UNIT DATA

MAJOR FORCE UNIT NUMBER 13010 (ALL CARDS) MISSION/AREA K (ALL CARDS) RUN NUMBER 1

	CODE	FORMAT	
TITLE	00001	F	INF/MECH DIV - FA HOW 105/155 SP 6-125D/
SEC. DEF. NO.	00011	B	3.02.05.02.1

	CODE	FORMAT		N-1	N	N+1	N+2
FORCE STRUCTURE	00013	J	FA HOW 105/155/8" SP	8	8	10	15
	00029	J					
	00045	J					
COMMENTS	00157	F					
	00167	F					
	00177	F					

FISCAL YEAR

	CODE	FORMAT	N-1	N	N+1	N+2	N+3	N+4	N+5
FA BN HOW 105/155 SP 6-125D	20250	2	8	8	0				
FA BN HOW 105 SP 6-345E	20350	2			6	9	12		
FA BN HOW 155/8" SP 6-355E	20360	2			4	6	8		
ADJUSTMENT FACTORS: OFFICER	00061	1							
ENLISTED	00073	1							
CIVILIAN	00085	1							
EQUIPMENT	00097	1							
RELATED EQUIPMENT	00109	1							
REPLACEMENT / CONSUMPTION	00121	1							
TRAINING CONSUMPTION	00133	1							
	00145	1							
	00167	1							

Table 13.1

MAJOR FORCE UNIT DATA

I

NUMBER 13010 (ALL CARDS) MISSION/AREA K (ALL CARDS) RUN NUMBER 000000 (ALL CARDS) PAGE 1 OF 1

FISCAL YEAR: N= 1968

CODE	FORMAT	
001	F	INF/MECH DIV - FA HOW 105/155 SP 6-125D/6-345E/6-355E
011	B	3.02.05.02.1

FISCAL YEAR

			N-1	N	N+1	N+2	N+3	N+4	N+5	N+6	N+7	N+8	N+9	N+10
013	J	FA HOW 105/155/8" SP	8	8	10	15	20							
029	J													
045	J													

157	F	
167	F	
177	F	

FISCAL YEAR

			N-1	N	N+1	N+2	N+3	N+4	N+5	N+6	N+7	N+8	N+9	N+10
250	2		8	8	0									
350	2				6	9	12							
360	2				4	6	8							
061	1													
073	1													
085	1													
097	1													
109	1													
121	1													
133	1													
145	1													
187	1													

II

Table 13.2

BASIC FORCE UNIT DATA

BASIC FORCE UNIT NUMBER 20350 (ALL CARDS) MISSION/AREA K (ALL CARDS) RUN NUMBER 000000 (ALL CARDS)

1

FISC

	CODE	FORMAT	
TITLE	00001	F	FA BN HOW 105 SP 6-3456
COMMENTS	00157	F	
	00167	F	
	00177	F	

	CODE	FORMAT	FISCAL YEAR N-1	N	N+1	N+2	N+3	N+4	N+5	N+6
OFFICER - OTHER	41040	2	45							
ENLISTED - OTHER	42040	2	573							
REDEYE MISSILE	30137	2			97					
REDEYE OTHER	02138	3			736	124	0			
CARRIER COMD POST XM577	30201	2	15							
CARRIER PERS RECON T114	30203	2	31							
GUN MACH 7.62 MM M60	30209	2	73							
GUN MACH CAL .50 M85	30211	2	68							
HOW LT SP FT 105MM T195E1	30215	2	25							
LAUNCHER GRENADE 40MM M79	30221	2	30							
RECOV VEH FT LT ARMD T120E1	30227	2	5							
RIFLE 7.62 MM M14	30229	2	573							
TRAILER CARGO 1/4 TON M416	30241	2	24							
TRUCK 3/4 TON ABT	30245	2	35							
TRUCK 2½ TON 6X6 ABT	30247	2	15							
TRUCK 5 TON 6X6 ABT	30249	2	12							
TRUCK 8 TON 4X4 (GOER)	30251	2	7							
TRUCK 16 TON 4X4 (GOER)	30253	2	4							
TRUCK UTIL 1/4 TON M151	30259	2	14							
V-G AGENT ALARM	30401	2	14							
RADIO SET AN/VRC-12	30617	2	60							
RADIO SET AN/PRC-25	30619	2	36							
WIRE FIELD WD-1/TT (Miles)	30623	2	160							
O/H AP 2300 $/AVG UNIT	06660	3	1600							

ADJUSTMENT FACTORS	CODE	FORMAT	N-1	N	N+1	N+2	N+3	N+4	N+5	N+6
OFFICER	00061	1								
ENLISTED	00073	1								
CIVILIAN	00085	1								
EQUIPMENT	00097	1								
	00109	1								
	00121	1								

11/18/62

Table 13.2

BASIC FORCE UNIT DATA II

2050 ALL CARDS — MISSION/AREA K ALL CARDS — RUN NUMBER 000000 ALL CARDS — PAGE 1 OF 1

FISCAL YEAR: N = 1963

FORMAT

F FA BN HOW 105 SP 6-3455

F

F

F

FISCAL YEAR

	N-1	N	N+1	N+2	N+3	N+4	N+5	N+6	N+7	N+8	N+9	N+10
2	45											
2	573											
2			97									
3			736	124	0							
2	15											
2	31											
2	73											
2	62											
2	26											
2	30											
2	5											
2	573											
2	24											
2	35											
2	15											
2	12											
2	7											
2	4											
2	14											
2	14											
2	60											
2	36											
2	160											
3	1600											

III A

Table 13.3

MATERIEL PHASING SCHEDULE

GENERIC TYPE NUMBER 30215 ALL CARDS

RUN NUMBER 000000

1

FIS

GENERIC NAME	MISSION/AREA	CODE	FORMAT	
	A	00001	F	HOWITZER LT SP FT 105MM T195E1 + SUBSTITUT

FISCAL YEAR

MISSION/ AREA NAME	MODEL NAME	MISSION/AREA	CODE	FORMAT	N-1	N	N+1	N+2	N+3	N+4	N+5	N+
WORLD WIDE	STANDARD A	A	31215	5				02000	10000			
	STANDARD B		32215		10000			08000	00000			
			3									
			3									
		A	3	5								
EUROPE	STANDARD A	K	31215	5		07500	10000					
	STANDARD B		32215		10000	02500	00000					
			3									
			3									
		K	3	5								
STRAC	STANDARD A	Q	31215	5		02000	08000	10000				
	STANDARD B		32215		10000	08000	02000	00000				
			3									
			3									
		Q	3	5								
OTHER STRAF	STANDARD A	R	31215	5		01500	06500	10000				
	STANDARD B		32215		10000	08500	03500	00000				
			3									
			3									
		R	3	5								
			3	5								
			3									
			3									
			3									
			3	5								
			3									
			3									
			3									
			3	5								
			3									
			3									
			3									
			3	5								
			3									
			3									
			3									
			3	5								
			3									
			3									
			3									
			3	5								

Table 13.3

MATERIEL PHASING SCHEDULE

III A

IUMBER 30215 ALL CARDS

RUN NUMBER 000000 ALL CARDS

PAGE 1 OF 1

FISCAL YEAR N= 1963

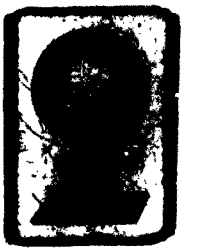

ODE	FORMAT	HOWITZER LT SP FT 105MM T195E1 + SUBSTITUTES
001	F	

FISCAL YEAR

		N-1	N	N+1	N+2	N+3	N+4	N+5	N+6	N+7	N+8	N+9	N+10
215	5				02000	10000							
215		10000			08000	00000							
215	5		07500	10000									
215		10000	02500	00000									
215	5		02000	08000	10000								
215		10000	08000	02000	00000								
215	5		01500	06500	10000								
215		10000	08500	03500	00000								
	5												
	5												
	5												
	5												

III B

Table 13.4

MATERIEL DATA

MATERIEL NUMBER 31215 (ALL CARDS) MISSION / AREA A (ALL CARDS) RUN NUMBER 000000 (ALL CARDS)

	CODE	FORMAT	
MATERIEL NAME	00001	F	HOWITZER LT SP FT 105MM T195E1

FISCAL YEAR

			N-1	N	N+1	N+2	N+3	N+4	N+5	N+6
YEARLY DATA: UNSPECIFIED UNITS EQUIPMENT ALLOWANCE FACTOR	00023	5	05000							
YEARLY DATA: REPLACEMENT / CONSUMPTION RATE (/ YEAR)	00039	5								
NO-YEAR DATA: COMBAT CONSUMPTION RATE (/ MONTH)	00037	V	00400							
NO-YEAR DATA: MAINTENANCE FLOAT COEFFICIENT	00038	S	00500							

AMMUNITION DATA

FISCAL YEAR

AMMUNITION NAME	DATA			N-1	N	N+1	N+2	N+3	N+4	N+5	N+6
175, 155MM, 105MM, M9 (AP) HM 4.2	COMBAT CONSUMPTION RATE	(/ DAY)	33210	6			00240	00320	00400		
	TRAINING CONSUMPTION RATE	(/ YEAR)	33 1	2							
175, 155MM 105MM, M444/ HM 400	COMBAT CONSUMPTION RATE	(/ DAY)	33230	6	00410	00580					
	TRAINING CONSUMPTION RATE	(/ YEAR)	33 1	2							
	COMBAT CONSUMPTION RATE	(/ DAY)	33 0	6							
	TRAINING CONSUMPTION RATE	(/ YEAR)	33 1	2							
	COMBAT CONSUMPTION RATE	(/ DAY)	33 0	6							
	TRAINING CONSUMPTION RATE	(/ YEAR)	33 1	2							
	COMBAT CONSUMPTION RATE	(/ DAY)	33 0	6							
	TRAINING CONSUMPTION	(/ YEAR)	33 1	2							

OTHER RELATED EQUIPMENT DATA

3
3
3
3
3
3
3
3
3
3

11/15/62

Table 13.4

MATERIEL DATA

III B

TERIEL NUMBER 31215 (ALL CARDS) MISSION / AREA A (ALL CARDS) RUN NUMBER 000000 (ALL CARDS)

PAGE 1 OF 1

FISCAL YEAR: N= 1963

	CODE	FORMAT		N-1	N	N+1	N+2	N+3	N+4	N+5	N+6	N+7	N+8	N+9	N+10
	00001	F	HOWITZER LT SP FT 105MM T195E1												
				FISCAL YEAR											
	00023	5		05000											
)	00039	5													
H)	00037	V		00400											
	00038	S		00500											
				FISCAL YEAR											
	33210	6					00240	00320	00400						
)	33 1	2													
	33230	6		00410	00580										
)	33 1	2													
	33 0	6													
	33 1	2													
	33 0	6													
	33 1	2													
	33 0	6													
	33 1	2													
	33 0	6													
	33 1	2													
	3														
	3														
	3														
	3														
	3														
	3														
	3														
	3														
	3														
	3														

Table 13.5

III C

MATERIEL COST DATA

MATERIEL NUMBER 31215 (ALL CARDS) MISSION/AREA A (ALL CARDS) RUN NUMBER 000000 (ALL CARDS)

1

	CODE	FORMAT	
MATERIEL NAME	00001	F	HOWITZER LT SP FT 105MM T195E1

FISCAL YEAR

			N-1	N	N+1	N+2	N+3	N+4	N+5	N+
YEARLY DATA										
YEARLY AVERAGE UNIT COST	00011	3	01177							

NO-YEAR DATA				
DELIVERIES TO T.O.A. INDEX	00035	T	00818	
DELIVERIES TO EXPENDITURES INDEX	00036	T		

MATERIEL COST DATA

III C

R 3 1 8 1 5 ALL CARDS

MISSION/AREA A ALL CARDS

RUN NUMBER 0 0 0 0 0 0 ALL CARDS

PAGE 1 OF 1

FISCAL YEAR N = 1963

FORMAT

F HOWITZER LT SP FT 105MM T195E1

FISCAL YEAR

	N-1	N	N+1	N+2	N+3	N+4	N+5	N+6	N+7	N+8	N+9	N+10
3	01177											

T 0 0 8 1 8
T

Table 13.6

MILITARY PERSONNEL DATA

D

MILITARY PERSONNEL TYPE, NUMBER 4 1 0 2 0 (ALL CARDS)

RUN NUMBER 0 0 0 0 0 0

1

FISCAL Y

	MISSION/AREA	CODE	FORMAT	
ILITARY PERSONNEL TYPE, NAME	A	0 0 0 0 1	F	OFFICER - HAZARDOUS

SSION / AREA NAME		ITEM NAME				FISCAL YEAR N-1	N	N+1	N+2	N+3	N+4	N+5	N+6
	YEARLY DATA												
VORLD WIDE	NO-YEAR DATA	PAY & ALLOWANCES	$/P$_m$	A	0 0 0 1 1	T	1 0 0 0 0						
		TURNOVER RATE			0 0 0 1 2	S	0 1 0 0 0						
		NEW PERSONNEL TRAINING COST	$/P$_m$		0 0 0 1 3	T	0 5 0 0 0						
		REPL. / DEF. CONSTRUCTION	$/P$_m$		0 0 0 1 4	T	0 0 2 0 0						
		UNSPECIFIED PEMA ITEMS	$/P$_m$		0 0 0 1 5	T	0 0 4 0 0						

						FISCAL YEAR N-1	N	N+1	N+2	N+3	N+4	N+5	N+6
	YEARLY DATA												
NUS	NO-YEAR DATA	PAY & ALLOWANCES	$/P$_m$	C	0 0 0 1 1	T	1 1 0 0 0						
		TURNOVER RATE			0 0 0 1 2	S	0 1 0 0 0						
		REPL. / DEF. CONSTRUCTION	$/P$_m$		0 0 0 1 4	T	0 0 2 0 0						
		UNSPECIFIED PEMA ITEMS	$/P$_m$		0 0 0 1 5	T	0 0 4 0 0						

						FISCAL YEAR N-1	N	N+1	N+2	N+3	N+4	N+5	N+6
	YEARLY DATA												
ERSEAS	NO-YEAR DATA	PAY & ALLOWANCES	$/P$_m$	B	0 0 0 1 1	T	1 3 0 0 0						
		TURNOVER RATE			0 0 0 1 2	S	0 1 0 0 0						
		REPL. / DEF. CONSTRUCTION	$/P$_m$		0 0 0 1 4	T	0 0 2 0 0						
		UNSPECIFIED PEMA ITEMS	$/P$_m$		0 0 0 1 5	T	0 0 4 0 0						

Table 13.6

MILITARY PERSONNEL DATA

III D

UMBER 41020 ALL CARDS

RUN NUMBER 000000 ALL CARDS

FISCAL YEAR: N= 1963

DE	FORMAT	
01	F	OFFICER - HAZARDOUS

FISCAL YEAR

		N-1	N	N+1	N+2	N+3	N+4	N+5	N+6	N+7	N+8	N+9	N+10
011	T	10000											
012	S	01000											
013	T	05000											
014	T	00200											
015	T	00400											

FISCAL YEAR

		N-1	N	N+1	N+2	N+3	N+4	N+5	N+6	N+7	N+8	N+9	N+10
011	T	11000											
012	S	01000											
014	T	00200											
015	T	00400											

FISCAL YEAR

		N-1	N	N+1	N+2	N+3	N+4	N+5	N+6	N+7	N+8	N+9	N+10
011	T	13000											
012	S	01000											
014	T	00200											
015	T	00400											

Table 13.7

III E

UNSPECIFIED UNIT PERSONNEL ALLOCATION SCHEDULE

TOTAL MILITARY PERSONNEL 40000 ALL CARDS

RUN NUMBER 1

MISSION/ AREA NAME	PERSONNEL TYPE NAME	MISSION/AREA	CODE	FORMAT	N-1	N	N+1	N+2	N+3	N+4
PACIFIC	OFFICER	J	41040	5	00400					
	ENLISTED		42040		05000	04000	03000			
	CIVILIAN - DIRECT HIRE		43010		07500	07000	06500	05500		
	CIVILIAN - FOREIGN NATIONAL		43020		03000	02800	02500			
			4							
			4							
			4							
			4							
			4							
			4							
			4							
		J	4	5						
EUROPE	OFFICER	K	41040	5	00600					
	ENLISTED		42040		07000	05000				
	CIVILIAN - DIRECT HIRE		43010		01000	00900	00850			
	CIVILIAN - FOREIGN NATIONAL		43020		04500	04900				
			4							
			4							
			4							
			4							
			4							
			4							
		K	4	5						
ALASKA	OFFICER	L	41040	5	02000					
	ENLISTED		42040		09000					
	CIVILIAN - DIRECT HIRE		43010		06000	06300				
			4							
			4							
			4							
			4							
			4							
			4							
		L	4	5						
CARIBBEAN	OFFICER	M	41040	5	05000					
	ENLISTED		42040		09500					
	CIVILIAN - DIRECT HIRE		43010		09500	09000				
	CIVILIAN - FOREIGN NATIONAL		43020		00500	00450				
			4							
			4							
			4							
			4							
			4							
			4							
		M	4	5						

Table 13.7

UNSPECIFIED UNIT PERSONNEL ALLOCATION SCHEDULE

IIIE

SONNEL 40000 ALL CARDS

RUN NUMBER 000000 ALL CARDS

PAGE 1 OF 2

FISCAL YEAR: N= 1965

CODE	FORMAT	N-1	N	N+1	N+2	N+3	N+4	N+5	N+6	N+7	N+8	N+9	N+10
		FISCAL YEAR											
1040	5	00400											
2040		05000	04000	05000									
3010		07500	07000	06500	05500								
3020		03000	02800	02500									
	5												
1040	5	00600											
2040		07000	05000										
3010		01000	00900	00850									
3020		04500	04900										
	5												
1040	5	02000											
2040		09000											
3010		06000	06300										
	5												
1040	5	05000											
2040		09500											
3010		09500	09000										
3020		00500	00450										
	5												

Table 13.8

WORLD WIDE DATA

IV A

1

NUMBER 00001 ALL CARDS

MISSION/AREA A ALL CARDS

RUN NUMBER 000000 ALL CARDS

FI

YEARLY DATA	CODE	FORMAT	N-1	N	N+1	N+2	N+3	N+4	N+5	N
EQUIP. COMBAT CONSUMP. STOCK LEVEL ADJUST. FACTOR.	00041	1								
RELATED EQUIPMENT STOCK LEVEL ADJUST. FACTOR	00053	1								
UNSPECIFIED PEMA ITEMS COST COEFFICIENT	00065	5	02800							

FISCAL YEAR

NO-YEAR DATA	CODE	FORMAT	
RUN NAME	00001	F	
TRANSFER TRANSPORTATION COST COEFFICIENT	00012	S	
TRAINING COST APPROPRIATION ALLOC. RATE, PEMA	00013	S	01100
TRAINING COST APPROPRIATION ALLOC. RATE, MCA	00014	S	00300
TRAINING COST APPROPRIATION ALLOC. RATE, O&MA	00015	S	02600
TRAINING COST APPROPRIATION ALLOC. RATE, MPA	00016	S	06000
SECOND DESTINATION TRANSP. COST COEFFICIENT	00026	S	
DAYS OF COMBAT STOCKS, EQUIPMENT	00027	U	00100
DAYS OF COMBAT SUPPLY, RELATED EQUIPMENT	00028	U	00100
OPERATING FORCES, BP-2000 $/$P_m$	00029	T	01700

1/15/62

Table 13.8

WORLD WIDE DATA

IV A

NUMBER 00001 (ALL CARDS) MISSION/AREA A (ALL CARDS) RUN NUMBER 000000 (ALL CARDS)

FISCAL YEAR: N= 1965

CODE	FORMAT	FISCAL YEAR N-1	N	N+1	N+2	N+3	N+4	N+5	N+6	N+7	N+8	N+9	N+10
00041	1												
00053	1												
00065	5	02200											

00001	F	
00012	S	
00013	S	01100
00014	S	00300
00015	S	02600
00016	S	06000
00026	S	
00027	U	00100
00028	U	00100
00029	T	01700

IVB

Table 13.9

MISSION /AREA DATA

NUMBER 00001 ALL CARDS

RUN NUMBER 000000 ALL CARDS

FISCA

MISSION / AREA NAME EUROPE

	MISSION/AREA	CODE	FORMAT	N-1	N	N+1	N+2	N+3	N+4	N+5	N+6
YEARLY DATA				FISCAL YEAR							
EQUIP. COMBAT CONSUMP. STOCK LEVEL ADJUST. FACTOR		00041	1								
RELATED EQUIPMENT STOCK LEVEL ADJUST. FACTOR		00053	1								
NO-YEAR DATA											
SECOND DESTINATION TRANSP. COST COEFFICIENT	K	00026	S								
DAYS OF COMBAT STOCKS, EQUIPMENT	T	00027	U	00100							
DAYS OF COMBAT SUPPLY, RELATED EQUIPMENT		00028	U	00100							
OPERATING FORCES, BP-2000 $/P_m		00029	T	01500							
	K										

1

MISSION / AREA NAME CONUS COMBAT

				N-1	N	N+1	N+2	N+3	N+4	N+5	N+6
YEARLY DATA				FISCAL YEAR							
EQUIP. COMBAT CONSUMP. STOCK LEVEL ADJUST. FACTOR		00041	1								
RELATED EQUIPMENT STOCK LEVEL ADJUST. FACTOR	T	00053	1								
NO-YEAR DATA											
SECOND DESTINATION TRANSP. COST COEFFICIENT	C	00026	S								
DAYS OF COMBAT STOCKS, EQUIPMENT		00027	U	00100							
DAYS OF COMBAT SUPPLY, RELATED EQUIPMENT		00028	U	00100							
OPERATING FORCES, BP-2000 $/P_m		00029	T	01600							
	C										

Table 13.9

MISSION /AREA DATA

IV B

NUMBER 00001 ALL CARDS

RUN NUMBER 000000 ALL CARDS

PAGE 1 OF 3

FISCAL YEAR: N = 1963

DE	FORMAT	FISCAL YEAR N-1	N	N+1	N+2	N+3	N+4	N+5	N+6	N+7	N+8	N+9	N+10
41	1												
53	1												
26	S												
27	U	00100											
28	U	00100											
29	T	01500											

		FISCAL YEAR N-1	N	N+1	N+2	N+3	N+4	N+5	N+6	N+7	N+8	N+9	N+10
41	1												
53	1												
26	S												
27	U	00100											
28	U	00100											
29	T	01600											

V A PROGRAM ADD / CHANGE DATA V A

RUN NUMBER CHANGE
FROM _____ TO _____

NEW RUN NUMBER ☐☐☐☐☐☐ ALL CARDS

EFFECTIVE DATE _____

PAGE ____ OF ____

FISCAL YEAR: N = _____

LINE NUMBER	ID	MISCELLANEOUS AREA	CODE	FORMAT	FISCAL YEAR N - 1	N	N + 1	N + 2	N + 3	N + 4	N + 5	N + 6	N + 7	N + 8	N + 9	N + 10
1																
2																
3																
4																
5																
6																
7																
8																
9																
10																
11																
12																
13																
14																
15																
16																
17																
18																
19																
20																
21																
22																
23																
24																
25																

COMMENTS ON CHANGES

Table 13.12

VB

PROGRAM DELETE DATA

VB

RUN NUMBER CHANGE
FROM _____ TO _____

DELETE [ ] ALL CARDS

NEW RUN NUMBER [ ][ ][ ][ ][ ][ ] ALL CARDS

EFFECTIVE DATE _____

PAGE ____ OF ____

LINE NUMBER	ID	MISSION/AREA	CODE
1			
2			
3			
4			
5			
6			
7			
8			
9			
10			
11			
12			
13			
14			
15			
16			
17			
18			
19			
20			
21			
22			
23			
24			

COMMENTS ON DELETIONS

Column	Contents of the Field
1-5	ID Numbers, described in Section 13.2.1.
6	Mission/Area Code, described in Section 13.7.1.
7-11	Data Code, described in Section 13.2.2.
13-72	Data.
73	Delete indicator, described in Section 13.5.2.
74	Aggregation level, described in Section 10.2.
75-80	Case and Run Number, used for identification.

The following example is provided to give the analyst some understanding of how the fields are used. It shows what information is punched into each of the fields when entering the unit cost of a rifle.

ID Number M-14 Rifle					World-Wide	Code for Unit Cost					Format for Units	$111 in Year N-1					Cost in Year N					Cost for Other Years			No. Deletion	No. Aggregation	Case and Run Number					
01	02	03	04	05	06	07	08	09	10	11	12	13	14	15	16	17	18	19	20	21	22	23	24		72	73	74	75	76	77	78	79	80
3	1	2	2	9	A	0	0	0	1	1	2	0	0	1	1	1	0	0	1	1	1							0	0	1	0	0	9

Sections 13.2.1 through 13.2.3 explain in some detail the coding structure of three fields: The ID numbers, the data codes, and the format codes. The coding of the other fields is explained elsewhere in the manual in Sections 9.3, 13.4 and 13.7.1.

13.2.1 Identification Numbers

The first five columns define the units, items or personnel to which the data are applicable.

The coding structure of the Mark I Army Cost Model allows twelve kinds of ID numbers. The first five columns may be any one of the following:

1XXXX	An ID starting with the digit "1" shows MFU data. The second digit shows which OSD program is involved (e.g., 13XXX indicates an MFU in Program III). An MFU ID may not be used for more than one mission/area designation.
2XXXX	An ID starting with the digit "2" shows BFU data.
30XXX	This pattern shows materiel phasing schedule data.
31XXX	This pattern shows data for a specific materiel item to be included in materiel annex output reports.
32XXX	This pattern shows data for a specific materiel item other than for the materiel annex (Standard B items being phased out, for example).
33XXX	This pattern shows a specific (materiel annex) item of <u>related</u> equipment.
40000	This specific ID shows ratios of specified to unspecified personnel.
41XXX	This pattern shows officer data.
42XXX	This pattern shows enlisted personnel data.
43XXX	This pattern shows data about civilian personnel.
00000	This specific ID shows dictionary data.
00001	This specific ID shows force and run constants.

No other group of first five digits is allowed.

13.2.2 Data Codes

Columns 7-11 define the specific kind of information which is included in the data field, columns 13-72; the specific data entries

would be meaningless without this code. The data coding structure is subordinate to the ID number; a specific set of data code digits may have several different meanings depending on the ID number with which it is used.

Tables 13.13 through 13.19 show, for each of the allowable ID numbers (see Section 13.2.1), the meanings of allowable data codes.

13.2.3 Format Codes

The Mark I format codes are listed and described in Table 13.20. The format code is punched in column 12 of each input card in order to define the dimensions of the data to follow in columns 13-72. The operator must be especially careful in selecting among formats 1 through 6. These format codes include special provisions for the use of blanks (not allowed to be intermixed with numbers, but the entire field may be blank) in order to minimize errors.

Format 1 is appropriate for adjustment factors and has been preprinted on the input sheets. If the adjustment fields are all left blank, the factor 1.0 will be used with no impact on the output. An adjustment factor may be inserted at the first year when it will go into effect; for all subsequent years blanks will be interpreted to mean continuance of the factor. Format 2 will usually be appropriate for force descriptions on Input Sheets I and II. Each of the numeric fields is expressed as units. The key punch operator can supply any needed zeros at the left. Thus, to show an authorization of 231 units, the input sheet field should be:

0	0	2	3	1	or			2	3	1

but <u>not</u>

		2	3	1	

Table 13.13

DATA CODES FOR MAJOR FORCE UNITS (ID NUMBER 1XXXX)

Data Code	Explanation	
1XXXX	Not allowed.	
2XXXX	Specifies numbers of BFU's at year end.	
3XXXX	Specifies the number of non-BFU materiel, year end.	
4XXXX	Specifies numbers of non-BFU personnel.	
00XXX and 0XXXX	Specifies the following fixed length data (00XXX) and the variable length data (0XXXX):	
	Fixed length Data	
00XXX	00001	MFU title.
	00011	Sec Def number.
	00013(00029(00045(	MFU force structure, year-end.
	00061	Adj. factor, officer.
	00073	Adj. factor, enlisted.
	00085	Adj. factor, civilian.
	00097	Adj. factor, equipment.
	00109	Adj. factor, related equipment.
	00121	Adj. factor, repl. consumption of equipment.
	00133	Adj. factor, training consumption of related equipment.
	00145(00187(	Adj. factors - unspecified and reserved for future use.
	00157(00167(00177(	comments

Table 13.13 (Cont.)

Variable Length Data

0XXXX	02XXX	Specifies thruput/output data: PEMA, materiel annex.
	03XXX	Specifies thruput/output data: other.
	04XXX	Specifies $/average military man.
	05XXX	Specifies $/incremental military man.
	06XXX(	Not
	07XXX(	allowed.

Table 13.14

DATA CODES FOR BASIC FORCE UNITS (ID NUMBER 2XXXX)

Data Code	Explanation	
1XXXX	Not allowed.	
2XXXX	Not allowed.	
3XXXX	Specifies numbers of materiel items per BFU.	
4XXXX	Specifies numbers of personnel per BFU.	
00XXX and 0XXXX	Specifies the following fixed length data (00XXX) and variable length data (0XXXX):	
	Fixed Length Data	
00XXX	00001	BFU title.
	00061	Adj. factor, officer.
	00073	Adj. factor, enlisted.
	00085	Adj. factor, civilian.
	00097	Adj. factor, equipment.
	00109(00121(	Adj. factor - unspecified and reserved for future use.
	00157(00167(00177(	Comments.
	Variable Length Data	
0XXXX	02XXX	Specifies thruput/output data: PEMA, Materiel Annex.
	03XXX	Specifies thruput/output data: other.
	04XXX	Not allowed.
	05XXX	Not allowed.
	06XXX	Specifies $/average BFU. (For data which
	07XXX	Specifies $/incremental BFU.(is constant per (unit over time, (only.

Table 13.15

DATA CODES FOR MATERIEL PHASING SCHEDULES (ID NUMBER 30XXX)

Data Code	Explanation
1XXXX	Not allowed.
2XXXX	Not allowed.
3XXXX	As follows:
	30XXX Not allowed.
	31XXX(Specify ratio of specific equipment 32XXX(item to generic item (30XXX). 33XXX(
4XXXX	Not allowed.
0XXXX	00001 Specifies name - all others - not allowed.

Table 13.16

DATA CODES FOR MATERIEL (ID NUMBERS 31XXX, 32XXX, and 33XXX)

Data Code	Explanation
1XXXX	Not allowed.
2XXXX	Not allowed.
3XXXX	As follows:
	30XXX Not allowed.
	33XX0 Specifies combat consumption rate of related equipment.
	33XX1 Specifies training consumption rate of related equipment.
4XXXX	Not allowed.
0XXXX	Specifies materiel constants and factors as follows:
	00001 Name
	00011 Yearly average unit cost.
	00023 Unspecified units equipment allowance factor.
	00035 Delivery to TOA Index.
	00036 Delivery to expenditures index.
	00037 Combat consumption rate.
	00038 Maintenance float coefficient.
	00039 Replacement consumption rate.

Table 13.17

DATA CODES FOR SPECIFIED AND UNSPECIFIED PERSONNEL

Specified Personnel
(ID 41XXX, 42XXX and 43XXX)

Data Code	Explanation
1XXXX	Not allowed.
2XXXX	Not allowed.
3XXXX	Not allowed.
4XXXX	Not allowed.
0XXXX	Specifies personnel constants and factors as follows:
	00001 Title
	00011 Pay and allowances $/military man.
	00012 Turnover rate.
	00013 New personnel training cost: $/military man.
	00014 Replacement/deficiency construction: $/military man.
	00015 Unspecified PEMA items cost: $/military man.

Unspecified Personnel
(ID Number 40000)

41XXX	Specifies ratio of officers to total military personnel.
42XXX	Specifies ratio of enlisted men to total military personnel.
43XXX	Specifies ratio of civilian personnel to total military personnel.

Table 13.18

DATA CODES FOR FORCE AND RUN CONSTANTS (ID 00001)

Data Code	Explanation
000XX	Specifies the force and run constant data as follows:
	00001 Run name.
	00012 Transfer transp. cost coeff.
	00013 Training cost appropr. alloc. rate: PEMA.
	00014 Training cost appropr. alloc. rate: MCA.
	00015 Training cost appropr. alloc. rate: O&M, A.
	00016 Training cost appropr. alloc. rate: MPA.
	00026 Second dest. transp. cost coeff.
	00027 Days of combat stocks, equipment.
	00028 Days of combat stocks, related equipment.
	00029 Operating forces: BP 2000 $/average man.
	00041 Equipment combat cons. stock level adj. factor.
	00053 Related equipment stock level adj. factor.
	00065 Unspecified PEMA items cost coefficient.
1XXXX	Not allowed.
2XXXX	Not allowed.
3XXXX	Not allowed.
4XXXX	Not allowed.

Table 13.19

DATA CODES FOR DICTIONARY ENTRIES
(ID Number 00000)

Data Code	Explanation
1XXXX	Dictionary Data Items for MFU.
2XXXX	Dictionary Data Items for BFU.
3XXXX	Dictionary Data Items for Materiel.
4XXXX	Dictionary Data Items for Personnel.
0XXXX	Dictionary Data Items for Dollar Inputs.
00XXX	Dictionary Data Items for Force and Run Constants.

NOTE: Refer to Section 13.6 for the description of dictionary entries.

Table 13.20

MARK I FORMAT CODES

Format Code	Description	Value of field if left blank: Extreme Left Hand Data Field	Value of field if left blank: All Other Data Fields
	Numeric		
1	12 Numeric fields of (X.XXXX)	1.0	Prior Field
2	12 Numeric fields of (XXXXX.)	0.0	Prior Field
3	12 Numeric fields of (XXXX.X)·(10^3)	0.0	Prior Field
4	12 Numeric fields of (XXXX.X)·(10^6)	0.0	Prior Field
5	12 Numeric fields of (X.XXXX)	0.0	Prior Field
6	12 Numeric fields of (XXX.XX)·(365)	0.0	Prior Field
7	7 Numeric fields of (X.XXXX)	0.0	0.0
8	7 Numeric fields of (X.XXXX)	0.0	0.0
J	24 Alphabetic characters plus 12 numeric fields of (XXX.)	0.0	Prior Field
S	1 Numeric field of (X.XXXX)	0.0	N/A
T	1 Numeric field of (XXXXX.)	0.0	N/A
U	1 Numeric field of (XXXXX.) ÷ (365)	0.0	N/A
V	1 Numeric field of (X.XXXX)·(12)	0.0	N/A
	Alphabetic	Not Applicable	
A	6 Alphabetic characters		
B	12 Alphabetic characters		
C	24 Alphabetic characters		
D	36 Alphabetic characters		
E	48 Alphabetic characters		
F	60 Alphabetic characters		

Similarly, to enter an authorization of 1,024 units, the input field should be:

0	1	0	2	4

or

	1	0	2	4

but <u>not</u>

1	,	0	2	4

Formats 3 and 4 are used instead of format 2 if the values to be entered are too large to be represented in units in a five digit field. Format 3 would be used to represent 356,700 as follows:

	3	5	6	7

Format 4 would be used to show 11,894,243 by rounding the quantity to 11,900,000 as follows:

		1	1	9

Format 5 is appropriate for use in materiel phasing shcedules and unspecified unit personnel allocations and it has been pre-printed on Input Sheets III A and III E. It can also be used for adjustment factors or for unit prices.

Format 6 is an example of the special conveniences furnished to the operator. The combat consumption rates of ammunition are most

readily available in terms of usage per day. This format is appropriate for related equipment on Input Sheet III B. The operator must recognize the unwritten decimal point. Five rounds per day would be entered:

			5	0	0

Where the operator has a choice between formats 2 and 3, or 3 and 4, he should, in general, use the lower numbered format. If, however, he can reasonably anticipate the general trend for future years, and the range of values during the twelve years specified is toward the higher format code, then he would be well advised to use the higher code.

In the case of alphabetic fields, A-F in Table 13.20, the operator should use the shortest field which will meet his needs; otherwise computer memory space is needlessly reserved.

13.2.4 Code Assignments in the Mark I Model

The foregoing sections described the general structure of the codes used for input data. However, the operator will need to know the specific coding assignments made for specific inputs.

Codes for major force units, basic force units, materiel items, and personnel types are best obtained from the Input Listings described in Section 13.4. The codes assigned for cost inputs are listed in Section 9.3. The mission/area codes are listed in Section 13.7.1.

13.2.5 Assigning New Code Numbers

This section explains how to select a 5 digit code number for new major force units, basic force units, materiel items, materiel thruputs,

personnel types and cost inputs. The number is the identifying code used on the input sheets and in the input listings.

Basically, the selection involves two steps. First, the operator should identify the proper range of allowable numbers for the particular category involved. Second, the operator should pick a specific number within that range which has not yet been used.

(a) Major Force Unit Codes. The first digit of a major force unit is 1 and the second digit is determined by the applicable SecDef Program. Thus if a new major force unit is added to Program III, the operator should select an unused number from 13000 to 13999.

Since the MFU's are printed out according to their numerical sequence, the choice of the last three digits depends on where the operator wants the unit printed out within the Program.

(b) Basic Force Unit Codes. The operator can select any unused number of 20000 to 29999. The sequence or choice within this range is immaterial since there is no output for basic force units.

(c) Materiel Item Codes. For materiel items, the first digit is always 3 and the second digit is defined as in the following list for materiel codes. For the model's computer program, only the first and the second digits are significant, except for related equipment where the final digit designates a stock or flow factor. The third digit designations are only for the operator's convenience. The third digit can be used to indicate, for example, whether a piece of equipment is an Engineer or Chemical item.

Code	Class of Equipment
Digit:	
1 2 3 4 5	
3	All Items
0	Generic
1	Standard A
2	Substitute
1 X X	Missiles
2 X X	Other Ordnance
4 X X	Chemical
5 X X	Engineer
6 X X	Signal
7 X X	Transportation
3	Related Equipment-Ammunition
X X 0	Stockage
X X 1	Consumption

Thus for a Standard A missile item, the operator should select an unused number between 31100 and 31199. The choice of the last two digits depends on the unused numbers available (see Part (d) of this section, "Materiel Thruput Codes," for further explanations) and the sequence desired by the operator within the range.

For an ammunition item the operator should select an unused number between 3300F and 3399F, where F will always be 0 for stockage, or 1 for training consumption, of the ammunition in question. The operator has a range of 100 available codes for ammunition; the range is confined to the third and fourth digits of the code.

(d) Materiel Thruput Codes. The range of codes for materiel thruputs is as follows:

Code					Materiel Thruput
Digit:					
1	2	3	4	5	
0	2				All Items
		1	X	E	Missiles
		2	X	E	Other Ordnance
		4	X	E	Chemical
		5	X	E	Engineer
		6	X	E	Signal
		7	X	E	Transportation
		9	X	E	Ammunition

For the computer program the first and second digit, which designate a materiel thruput, are significant. The final digit is also significant to the computer program and must always be an even number, i.e., only 0, 2, 4, 6, or 8. The third digit of the code is a mnemonic for the operator telling him again whether the item is Signal or Engineer, etc.

To assign a new materiel thruput code the operator can select any unused code conforming to the explanation above but with the following constraint. If the last 3 digit number combination is used as a materiel item code (30XXX), it cannot be used as a materiel thruput code and conversely, if the last 3 digit number combination is used as a materiel thruput code, it cannot be used as a materiel item code. For example, sets of the following types are not allowed:

Materiel Item Code	with Materiel Thruput Code
3X228	02228
3X230	02230
3X130	02130

(e) Personnel Codes. The range of codes for personnel types is determined by the first 2 digits of the code as follows:

Code Digit: 1 2 3 4 5	Types of Personnel
4	All types
1 X X X	Officers
2 X X X	Enlisted Men
3 X X X	Civilians

Thus for a new type of officer, the operator should select any unused number from 41000 to 41999.

(f) Cost Input Codes. The cost input codes in the model are as follows:

Code Digit: 1 2 3 4 5	Cost Input
0 3 X X X	Thruput/output data, TOA
0 4 X X X	$/average military man
0 5 X X X	$/incremental military man
0 6 X X X	$/average unit
0 7 X X X	$/incremental unit

All Budget Projects and Budget Accounts, e.g., BP 2300, are already coded for the model. A list of the Budget Projects and Budget Accounts is included in Section 9.3. The list shows that cost categories are coded with a OXAAA combination. If, for example, the operator wants to use BP 2300 on a dollars per average unit basis, the operator must maintain the final three digits of the code as given in the list and prefix the final three digits with "06," which signifies dollars per average unit. The code is 06660 for BP 2300 on a dollars per average unit basis. In other words, all Budget Projects and Budget Accounts are identified by the final three digits of their code.

If a new cost category is to be added and the operator wants to assign a code to the new account, the operator must consult with the ADP programmer when he assigns the code. The ADP programmer has to program the new code for the new account in order to have it aggregate in its proper cost category.

13.3 PREPARATION OF INPUT SHEETS

The input sheet is a vital step in communication between the model operator and the computer, which will accept punched cards. The input sheets are instructions to the card puncher. The input sheets, the available format codes, and the conventions which have been programmed into the computer operation all combine to provide a flexible, convenient technique for specifying model parameters. A minimum of writing and card punching is needed. To further reduce the risk of operator errors, certain required information is pre-printed on the input sheet.

Sections 13.3.1 to 13.3.3 explain the mechanical procedures for preparation of the input sheets which are described in Section 13.1.

13.3.1 Punched Card Layout

Section 13.2 describes in detail the standard 80 column cards and the fields into which the columns are divided. The punched card layout is repeated here as a convenient reference for the following Sections 13.3.2 and 13.3.3.

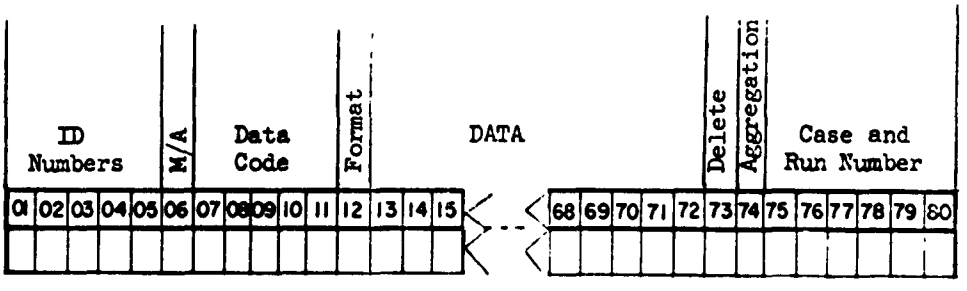

13.3.2 Allowable Characters

Each card column must contain one, and only one, character. Thus, the first five columns of each card represent a five character field. Punched card fields are of two types: numeric and alphabetic. A numeric field can contain only the digits 0 through 9. Within a numeric field blanks are usually not allowed, but key punch operators can be instructed to supply zeros in place of any blanks in numeric fields on input sheets. Decimal points and commas may not be used in numeric fields.

In alphabetic fields any of the 48 available characters may be used, as follows:

The digits 0 through 9	10
The letters A through Z	26
11 characters: . , + - = ( ) $ * ' /	11
Blank, sometimes represented by small b	1
Total available	48

To avoid any possible confusion, operators should be careful to employ the following standardized techniques (understood by key punch operators) to distinguish between similar characters:

Zero	numeric	0
Oh	alphabetic	Ø
One	numeric	1
Eye	alphabetic	I
Two	numeric	2
Zee	alphabetic	Z
Five	numeric	5
Ess	alphabetic	S

The operator should be familiar with the format codes available in the model (see Section 13.2.3). Except for format 7, blank fields can have values assigned to them from fields to the left. Entry of data which repeat from field to field is not necessary.

13.3.3 Illustration

Consider the case of a major force unit which is expected to include basic force units, identified as 20390, in the following amounts:

Fiscal Year	Units
N-1	0
N	0
N+1	8
N+2	8
N+3	6
N+4	6
N+5	6
N+6	6
N+7	0
N+8	0
N+9	0
N+10	0

The appropriate line on Input Sheet I need only show the following:

CODE					F	N-1					N					N+1					N+2					N+3				
07	08	09	10	11	12	13	14	15	16	17	18	19	20	21	22	23	24	25	26	27	28	29	30	31	32	33	34	35	36	37
2	0	3	9	0	2															8										6

N + 4					N + 5					N + 6					N + 7					N + 8					N + 9					N + 10				
38	39	40	41	42	43	44	45	46	47	48	49	50	51	52	53	54	55	56	57	58	59	60	61	62	63	64	65	66	67	68	69	70	71	72
																			0															

The key punch operator normally will supply additional zeros so that the input card will be like this:

CODE					F	N - 1					N					N + 1					N + 2					N + 3				
07	08	09	10	11	12	13	14	15	16	17	18	19	20	21	22	23	24	25	26	27	28	29	30	31	32	33	34	35	36	37
2	0	3	9	0	2											0	0	0	0	8						0	0	0	0	6

N + 4					N + 5					N + 6					N + 7					N + 8					N + 9					N + 10				
38	39	40	41	42	43	44	45	46	47	48	49	50	51	52	53	54	55	56	57	58	59	60	61	62	63	64	65	66	67	68	69	70	71	72
															0	0	0	0	0															

The computer program, in reading this card, will supply meanings for the blanks as follows:

CODE					F	N-1					N					N+1					N+2					N+3				
07	08	09	10	11	12	13	14	15	16	17	18	19	20	21	22	23	24	25	26	27	28	29	30	31	32	33	34	35	36	37
2	0	3	9	0	2	0	0	0	0	0	0	0	0	0	0	0	0	0	0	8	0	0	0	0	8	0	0	0	0	6

N+4					N+5					N+6					N+7					N+8					N+9					N+10				
38	39	40	41	42	43	44	45	46	47	48	49	50	51	52	53	54	55	56	57	58	59	60	61	62	63	64	65	66	67	68	69	70	71	72
0	0	0	0	6	0	0	0	0	6	0	0	0	0	6	0	0	0	0	0	0	0	0	0	0	0	0	0	0	0	0	0	0	0	0

There is, therefore, no need to write or punch the values which can be thus applied.

The space at the left of the input sheets is for descriptive language which will help the operator to interpret the coding. The language is not key punched and is not used in any model computations. In checking, however, the operator will find this descriptive language to be useful. Examples are shown on the Input Sheets in Tables 13.1 through 13.10.

13.4 INPUT LISTINGS

An Input Listing is a machine print out containing all the data entered in the model in order to cost a specified force structure. The Input Listing includes every piece of data, whether it be the name of a unit, the number of personnel in a unit, the cost of a piece of equipment or just a comment for a particular unit, that has been entered by the analyst on the input sheets.

There are two types of Input Listings: a Standard Listing and an Inverse Listing. The two Listings do not contain different data; only the arrangement of the data is varied. In the Standard Listing the data are arranged by identification number, mission/area code, and data code, whereas the Inverse Listing is arranged by data code, identification number and mission/area code. Both the identification number and data code sorts are in numeric order proceeding from the lowest 5 digit number, 00001, to the highest 5 digit identification number and code used in the model. The mission/area sort follows the

order of the alphabet. Tables 13.21 and 13.22 are examples of a Standard and an Inverse Listing, respectively.

Both of the Listings are obtained by printing out the data on the input tape using a separate computer program written especially for that purpose. Either or both of the Listings may be obtained by the cost model operator upon request.

13.4.1 Standard Listing

The Standard Listing is a sort of all input cards on columns 1 through 11, which contain the identification number, mission/area code and data code of each line of input. An example of the sort follows:

ID (1-5)	M/A (6)	DATA CODE (7-11)
13330	J	20330
13330	K	20330
13330	K	20340
20540	J	06660
20540	J	30209
20540	K	06660
20540	K	30209
20550	J	06660

The sort is based first on the identification number, columns 1-5; then on the mission/area, column 6, for the same identifications. The final sort is on the data code, columns 7-11, for like identification--mission/area combinations. This sort is then printed out in the Standard Listing in a meaningful sequence. A meaningful sequence

TABLE 13.21

SAMPLE STANDARD INPUT LISTING

ARMY COST MODEL - SAMPLE RUN 001234 FEB.13,1963 PAGE 291

MAJOR FORCE UNIT DATA (I)

NAME-HYPOTHETICAL BRIGADES - OTHER BRIGADE UNITS IDENTIFICATION-13984 M/A-EUROPE (K)

SEC. DEF. PROGRAM NUMBER
00011 3.20.01.11.4

		1962	1963	1964	1965	1966	1967	1968	1969	1970	1971	1972	1973
MFU FORCE STRUCTURE YEAR END													
00013	OTHER BRIGADE UNITS	15	15	15	15	15	15	15	15	15	15	15	15

COMMENTS
00157 THIS IS A SAMPLE PRINT OUT.

		1962	1963	1964	1965	1966	1967	1968	1959	1970	1971	1972	1973
ADJUSTMENT FACTOR - OFFICER													
00061	FRACTS	0.5000	0.7500	1.0000	1.0000	1.0000	1.0000	1.0000	1.0000	1.0000	1.0000	1.0000	1.0000
ADJUSTMENT FACTOR - EQUIPMENT													
00097	FRACTS	0.7500	0.8500	1.0000	1.0000	0.9000	0.9000	0.9000	0.9000	0.9000	0.9000	0.9000	0.9000
TOA OTHER - RDT+E BA 2040													
03110	MILLS	0003.5	0002.0	0001.2	0	0	0	0	0	0	0	0	0
AVN CO 1-47E													
20040	UNITS	00003	00003	00003	00003	00003	00003	00003	00003	00003	00003	00003	00003
ENGR CO 5-127E													
20190	UNITS	00003	00003	00003	00003	00003	00003	00003	00003	00003	00003	00003	00003
CAV RECON SQDN 17-135E													
20970	UNITS	00003	00003	00003	00003	00003	00003	00003	00003	00003	00003	00003	00003
MECH BDE SPT BN 29-75E													
21530	UNITS	00003	00003	00003	00003	00003	00003	00003	00003	00003	00003	00003	00003
MECH BDE HHC 37-102E													
21540	UNITS	00003	00003	00003	00003	00003	00003	00003	00003	00003	00003	00003	00003
TRUCK 8 TON 4X4 ABT (GUER)													
30251	UNITS	00015	00015	00015	00015	00015	00015	00015	00015	00015	00015	00015	00015

TABLE 13.22
SAMPLE INVERSE INPUT LISTING

ARMY COST MODEL - SAMPLE RUN 001234 FEB.13,1963 PAGE 452

				1962	1963	1964	1965	1966	1967	1968	1969	1970	1971	1972	1973
COMPUTER SET AN/TYK-5															
21120	K	30401	2	00006	00006	00006	00006	00006	00006	00006	00006	00006	00006	00006	00006
21170	J		2	00002	00002	00002	00002	00002	00002	00002	00002	00002	00002	00002	00002
21200	K		2	00007	00007	00007	00007	00007	00007	00007	00007	00007	00007	00007	00007
21200	Q		2	00007	00007	00007	00007	00007	00007	00007	00007	00007	00007	00007	00007
21200	R		2	00007	00007	00007	00007	00007	00007	00007	00007	00007	00007	00007	00007
21280	J		2	00005	00005	00005	00005	00005	00005	00005	00005	00005	00005	00005	00005
21280	K		2	00005	00005	00005	00005	00005	00005	00005	00005	00005	00005	00005	00005
21530	H		2	00002	00002	00002	00002	00002	00002	00002	00002	00002	00002	00002	00002
21960	J		2	00009	00009	00009	00009	00009	00009	00009	00009	00009	00009	00009	00009
22110	Q		2	00004	00004	00004	00004	00004	00004	00004	00004	00004	00004	00004	00004
														000013 CARDS	
ELECTRONICS COUNTERMEASURES SETS AN/ALQ-37 AND AN/VLQ-1															
13284	G	30403	2	00012	00012	00012	00012	00012	00012	00012	00012	00012	00012	00012	00012
15040	H		2	00457	00457	00457	00457	00457	00457	00457	00457	00457	00457	00457	00457
21450	J		2	00021	00021	00021	00021	00021	00021	00021	00021	00021	00021	00021	00021
21630	Q		2	00018	00018	00018	00018	00018	00018	00018	00018	00018	00018	00018	00018
														000004 CARDS	
MULTIPLEXER SET AN/TCC-45															
13284	G	30405	2	00635	00635	00635	00635	00635	00635	00635	00635	00635	00635	00635	00635
15040	H		2	00113	00113	00113	00113	00113	00113	00113	00113	00113	00113	00113	00113
20320	J		2	00039	00039	00039	00039	00039	00039	00039	00039	00039	00039	00039	00039
20320	K		2	00039	00039	00039	00039	00039	00039	00039	00039	00039	00039	00039	00039
20320	Q		2	00039	00039	00039	00039	00039	00039	00039	00039	00039	00039	00039	00039
21600	K		2	00052	00052	00052	00052	00052	00052	00052	00052	00052	00052	00052	00052
														000006 CARDS	

would be by basic force unit by mission/area, or by major force unit by mission/area. Table 13.21 illustrates the way in which inputs for an MFU are listed in the Standard Input Listing.

The sequence of the Standard Listing is as follows:

Force and Run Constants
Major Force Unit Data
Basic Force Unit Data
Materiel Phasing Schedule
Equipment/Materiel Data
Military Personnel Data

The Standard Listing furnishes the analyst with such information as the numbers and types of BFU's in an MFU; the materiel items in a BFU by quantity and year; the personnel types in a BFU by number and year; the phasing schedule of a materiel item; all materiel related data; and all personnel related data.

13.4.2 Inverse Listing

The Inverse Listing is also a sort of all input cards on columns 1 through 11, with the exception that the first sort is based on the numerical order of the data code, columns 7-11. When the data codes are identical, the next sort is based on the identification number. If the data code - identification number combination are still identical, a final sort is made by mission/area. The order of the columns is still preserved in the print out of the Inverse Listing. The same example used to illustrate the Standard Listing would appear in the Inverse Listing as follows:

ID	M/A	DATA CODE
(1-5)	(6)	(7-11)
20540	J	06660
20540	K	06660
20550	J	06660
13330	J	20330
13330	K	20330
13330	K	20340
20540	J	30209
20540	K	30209

The example does not include the data in columns 12-72 which appear in the Standard and Inverse Listings. The print out in the Inverse Listing is divided as follows:

Major Force Unit Names
Basic Force Unit Names
Equipment/Materiel Names
Personnel Types
Sec. Def. Program Numbers
Yearly Average Unit Costs
Pay and Allowances $/Avg. Man
Turnover Rates
Training Cost Appropriation Allocation Rate, PEMA
MFU Force Structure Year End
New Personnel Training Cost
Training Cost Appropriation Allocation Rate, MCA
Replacement/Deficiency Construction $/Avg. Man
Training Cost Appropriation Allocation Rate, O&MA
Unspecified PEMA $/Avg. Mil. Man
Training Cost Appropriation Allocation Rate, MPA
Unspecified Units Equipment Allowance Factors
Days of Combat Stocks, Equipment
Days of Combat Supply, Related Equipment
Operating Forces, BP 2000 $/Avg. Man
MFU Force Structure Year End
Deliveries to TOA Index
Combat Consumption Rate Per Month
Maintenance Float Coefficients

Replacement/Consumption Rates Per Year
MFU Force Structure Year End
Unspecified PEMA Items Cost Coefficient
Comments
Deliveries to TOA - Index XXX
Materiel Annex Thruput Costs
Other Thruput Costs and Factors
Basic Force Unit Assignments
Materiel Assignments
Materiel Phasing Schedules
Personnel Assignments

The Inverse Listing may be used to obtain several types of information, for example:

All BFU's which have a requirement for a given materiel item;

All BFU's which have a requirement for a given personnel type;

The modernization rate (phasing schedule) for a materiel item by mission/area;

The maintenance float coefficient for any materiel item;

The replacement/consumption rate for any materiel item;

The titles of any BFU, MFU, equipment item, or personnel type.

13.5 INPUT CHANGE PROCEDURES

This section of the manual describes the procedures for making changes to the model inputs, either to update the base case or to examine cost implications of alternative forces. Each departure from the base case requires modifying the model inputs and is accomplished by filling out Data Change Input Sheets V A and V B. Input Sheets I through IV may be used for additions and changes if desired, although Input Sheet V A is more flexible.

Modifications to the model input data fall into three categories: additions, deletions and replacements. Additions merely require the adding of new data, and deletions, the removal of existing data. Replacements, however, are more complex. When replacing existing data involving only columns 13-72, the procedure for making additions is followed. When the replacement involves changing any of the first eleven columns (Identification Number, Mission/Area Code, Data Code), both addition and deletion processes must be performed. Each of these procedures is discussed in detail in Sections 13.5.1-13.5.3.

The initial step in performing any modifications requires the determination of proper identification numbers, mission/area codes and data codes. These may be found in the Standard or Inverse Listings where identification and mission/area distributions are shown in complete array for each code number.

All modifications to the model must be entered as completely new data, not as increments or decrements to existing inputs.

13.5.1 Additions

When adding new data to the model the proper code number is selected and entered in columns 7-11 on Input Sheet V A (see Table 13.11). The identification number and mission/area code are entered in columns 1-5, and column 6, respectively. The format code is chosen to accommodate the data (see Section 13.2.3) and entered in column 12. The data are

then entered in columns 13-72. These sixty columns are divided into twelve fields of five columns, each field corresponding to a year for the entering of yearly data. For textual or non-year-oriented data, line numbers 21-25 are used.

There are cases where a modification of a single entry involves several identification numbers and/or mission/areas. In these cases each occurrence must be recorded. The following example illustrates the case in point. Assume that ten Light Tracked Command Post Carriers XM577 are assigned to all Infantry Battalions, TOE 7-15E. As this item is not now assigned to these units, the modification becomes an addition to the model. Using the Inverse Listing, under the section "Equipment/Materiel Names," the identification number for the Command Post Carrier is determined to be 30201. Still using the Inverse Listing, under the section "Basic Force Unit Names," the identification number for TOE 7-15E is determined to be 20570. However, the Inverse Listing shows six TOE 7-15E units, each for a different mission/area. Each unit, then, must be entered once for each mission/area, as shown in the following illustration:

Input Sheet V A

LINE NUMBER	ID	MISSION/AREA	CODE	FORMAT	N - 1	N	N + 1	N + 2	N + 3	N + 4	N + 5
					FISCAL YEAR						
1	20570	J	30201	2	10						
2	20570	K	30201	2	10						
3	20570	L	30201	2	10						
4	20570	M	30201	2	10						
5	20570	N	30201	2	10						
6	20570	P	30201	2	10						
7											
8											
9											

In this example the number of vehicles assigned is entered in columns 13-17 regardless of the intended date of phase-in. The phasing schedule will control the rate and timing of phase-in.

13.5.2 Deletions

Deleting data from the model is accomplished by entering on Input Sheet V B (see Table 13.12) the identification number, mission/area code and data code in their appropriate fields and inserting a minus sign in Column 73. Data entries (Columns 13-72) are not necessary in the deletion process. As an example, deletion of all Command Post Carriers from TOE 7-15E in Alaska is illustrated below:

Input Sheet V B

RUN NUMBER CHANGE
FROM_____TO_____

DELETE [-] ALL CARDS

LINE NUMBER	ID	MISSION/AREA	CODE	FORMAT
1	20570	L	30201	
2				
3				

A separate sheet is maintained for deletions to avoid confusion and to facilitate the task of the key punch operator. Deletions must be made using sheet V B since none of the other input sheets has provision for entering the deletion indicator in column 73.

13.5.3 Replacements

Replacement is made of existing data in the model either in: (1) data entries only (columns 13-72) or (2) in the identification number, mission/area code and/or data code (columns 1-12). In the former, replacements are made as described in Section 13.5.1. In the latter, the existing data must first be deleted and then the new data added. These two processes are illustrated below. The first example illustrates a quantitative change for Command Post Carriers from 10 to 15 in Europe and 25 in STRAC, a change involving data entries only.

Input Sheet V A

RUN NUMBER CHANGE
FROM_____TO_____

NEW RUN NUMBER ALL CARDS

LINE NUMBER	ID	MISSION/AREA	CODE	FORMAT	N - 1	N	N + 1	N + 2	N + 3	N + 4	N + 5
					FISCAL YEAR						
1	20570	K	30201	2	15						
2	20570	G	30201	2	25						
3											
4											
5											
6											

The second example illustrates a change in requirement for Command Post Carriers in the Pacific to Personnel Carriers, T114, data code 30203. Note that first it is necessary to delete the Command Post Carrier and then add the Personnel Carrier.

Input Sheet V B

RUN NUMBER CHANGE
FROM _____ TO _____

DELETE [ ] ALL CARDS

NEW RUN NUMBER [ ][ ][ ][ ][ ][ ] ALL CARDS

LINE NUMBER	ID	MISSION/AREA	CODE	FORMAT
1	20570	J	30201	
2				
3				
4				

Input Sheet V A

RUN NUMBER CHANGE
FROM _____ TO _____

NEW RUN NUMBER [ ][ ][ ][ ][ ][ ] ALL CARDS

LINE NUMBER	ID	MISSION/AREA	CODE	FORMAT	N - 1	N	N + 1	N + 2	N + 3	N + 4	N + 5
										FISCAL YEAR	
1	20570	J	30203	2	10						
2											
3											
4											
5											

13.5.4 Conventions

(a) Run Number. Each group of changes to the base case must be identified in order to maintain a control over the various changes that occur. The initial run number provides a benchmark from which further departures may be undertaken. A run number is assigned, generally in sequence for each subsequent group of changes, and entered in columns 75-80. Each entry, addition, deletion and/or replacement must receive a run number. This identifying number will appear on each Update Listing (see Section 13.5.5).

(b) Repetitions. To facilitate the entering of data on the input sheet, repetitions of data within a field may be indicated by an arrow. The arrow extends vertically from the first entry to the last indicating that within these confines all entries are repeated. To illustrate, the example in Section 13.5.1 would now appear as follows:

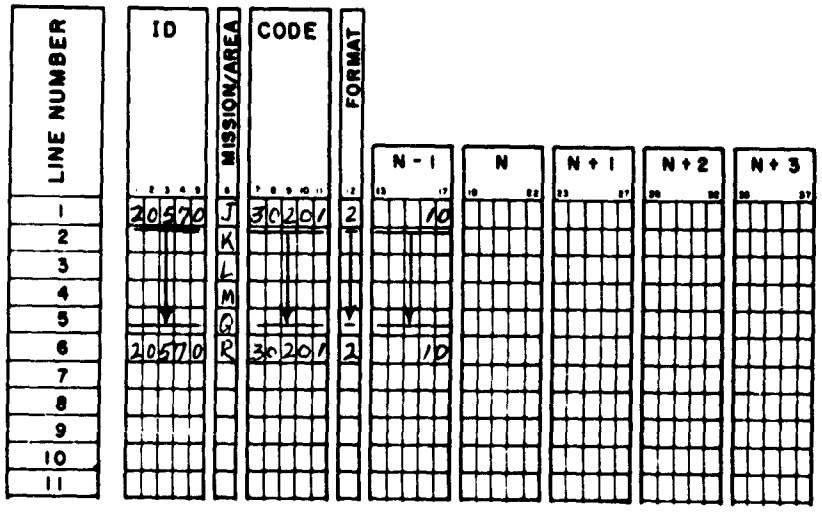

13.5.5 Update Listings

The Update Listing is a computer print out of all changes made to input data in the model for a new run, i.e., the changes made from one run to the next.

There are three types of changes which appear in the Update Listing. A card may be replaced by another card, a card may be deleted or a card may be added. Examples of each of the three types of changes may appear as follows:

RUN XXXX TO XXXI

Change No. 0001 CARD	-	13268	Q	03220	4	00288	00163
REPLACED BY	-	13268	Q	03220	4	00229	00163
Change No. 0002 CARD DELETED	-	41010	C	00015	T	00400	
Change No. 0003 CARD ADDED	-	15200	H	03722	4	00089	

At the end of the Update Listing there will be a short summary of the new total of input cards in the model. In addition, the number of additions, deletions and replacements in the Update Listing will appear.

The Update Listing can be of assistance to the analyst, for example, in providing a dated record of changes made from run to run. It also supplies an easy method for checking the accuracy of changes entered in the model prior to a new run.

13.6 DICTIONARY

The dictionary contains the English which is used in the model's reports and input listings. In contains all the English except the

Program names, the cost category names, and the mission/area names.

The dictionary is divided into three parts. The first part contains the title cards which are automatic entries to the dictionary made on Input Sheets I through IV. The second part contains fixed data, which have an 00XXX code. The third part contains cost inputs, which have an 0XXXX code. The dictionary entries, except title cards, are printed out in a report titled Army Cost Model Dictionary. The parts of the dictionary are explained in Sections 13.6.1 through 13.6.4.

13.6.1 Title Cards

All title cards become automatic entries into the dictionary. The title cards are not part of the "permanent" dictionary but only become part of the dictionary for each run of the model. Before the computer program begins the computational portion of the model run, the program makes a pass through all the input data, picking up all the title cards and storing them in memory along with the "permanent" portion of the dictionary. The operator does not have to fill out dictionary entries for the cards which are automatic entries in the dictionary; the computer program performs this part of the operation.

Title Cards

Identification	Mission/Area	Data Code
1XXXX	X	00001
2XXXX	X	00001
3XXXX	X	00001
4XXXX	X	00001

13.6.2 Fixed Data

All inputs which have a data code of 00XXX (columns 7-11 in the input sheets described in Section 13.1) are recorded in the dictionary by entering the first two digits of the identification number (columns 1 and 2 in the input sheets) in columns 7 and 8, and the last three digits of the data code in columns 9, 10 and 11 in the dictionary. For example, the yearly average unit cost, which has a data code of 00011 and which may be used for Standard A equipment (ID 31XXX), substitute equipment (ID 32XXX) and/or ammunition items (ID 33XXX), is entered in a complete series in the dictionary in the following manner:

Yearly Average Unit Cost Dictionary Entries

01	02	03	04	05	06	07	08	09	10	11	12	13	14	15	16	17	18	
0	0	0	0	0	0	3	1	0	1	1	C	Y	E	A	R	L	Y	...
0	0	0	0	0	0	3	2	0	1	1	C	Y	E	A	R	L	Y	...
0	0	0	0	0	0	3	3	0	1	1	C	Y	E	A	R	L	Y	...

The rules for recording these data codes in the dictionary are:

- The identification and mission/area columns, 1-6, are always filled with zeros.
- The first two digits of the identification number from the input sheets are entered in columns 7 and 8 (see Section 13.2.1 on identification numbers).
- The last three numbers of the data code from the input sheets are entered in columns 9, 10 and 11 (see Section 13.2.2 on data codes).
- The appropriate alphabetic format code from the input sheets is entered in column 12 (see Section 13.2.3 on format codes).
- The English is entered beginning in column 13 but does not extend beyond column 72.

In looking through the prirt out of the Army Cost Model Dictionary the operator will notice that the first two digits of the identification number and the data code are the same for all fixed data which are entered on Input Sheets IV A, Army-Wide Data; IV B, Mission/Area Data; and IV C, Deliveries to TOA Schedules. Both the identification number and the data code begin with COXXX. An example of this is the entry for "days of combat stocks, equipment."

01	02	03	04	05	06	07	08	09	10	11	12	13	14	15	16	
0	0	0	0	0	0	0	0	0	2	7	D	D	A	Y	S	...

The zeros in columns 7 and 8 represent the first two digits of the identification number, 00001, even though they are the same as the first two digits of the data code, 00027.

13.6.3 Cost Inputs

The cost inputs, which have a code of OXXXX, are entered in the following manner:

Example 1

01	02	03	04	05	06	07	08	09	10	11	12	13	14	15	16	17	18	19
0	0	0	0	0	0	0	2	6	2	4	B	S	T	A	R	C	Ø	M

Example 2

01	02	03	04	05	06	07	08	09	10	11	12	13	14	15	16	17	18	19	20	21	22	23	24	25	26	27
0	0	0	0	0	0	0	3	2	5	0	C	T	Ø	A		Ø	T	H	E	R		T	Ø	T	A	L

The rules are:

- The identification and mission/area, columns 1 through 6, are always filled with zeros.
- The data code is entered in columns 7 through 11.
- The appropriate alphabetic format code is entered in column 12.

-The English entry begins in column 13 but does not extend beyond column 72.

13.6.4 Requirements for a Change to the Dictionary

When it is necessary to make a change in the dictionary the procedures outlined in Section 13.5, "Input Change Procedures," should be followed. A change to the dictionary will be necessary when:

-The name of an input is altered.

-Changes are made to data codes of the form OXXXX, or when inputs having a data code of the form OXXXX are added. These types of changes to the dictionary must be coordinated with the ADP programmer.

13.7 LEVEL OF INPUTS: THE MISSION/AREA

The DOD programming system groups those Elements which share a common mission. For the Army, the structure is grouped further by area in Program III. The cost model is structured so that it can recognize differences in mission and geographical area. Units sharing a common mission or appearing in the same geographical area can be grouped together.

The model provides, in its mission/area designations, a framework for matching the DOD program system. Whenever a new major force unit is entered in the model (see Sections 13.2.5 and 13.5.1) it must be appropriately identified by mission/area.

The model recognizes that the units in any given mission/area may be different from those in other mission/areas, and that the differences may be in one or in many of the factors used in costing a force.

The mission/area identification is used to provide varying data.

Mission/area identification is also important in the model for allocating certain costs to force units (see Army Cost Model Structure and Flow[4] for a description of the allocation rules used in the model).

13.7.1 The Mission/Area "Tree"

In costing a force, the model gives appropriate recognition to applicable adjustment factors, force specification and to other cost parameters included. One of the flexible features in the model is the ability of the analyst to specify "applicable" factors by specific mission/area, or in terms of aggregations of mission/areas.

The structure for achieving flexibility may be likened to a tree; the mission/area "tree" has "World-Wide" as its trunk. The major limbs are groups which are alike in broad characteristics:

Overseas combat
CONUS combat
Non-combat programs

These major limbs are further subdivided into individual branches. The "tree" is displayed in Table 13.23.

All input data are identified to a particular mission/area. Major force units are assigned to the mission/area in which they appear in the force structure. Other data may be entered at various levels in the mission/area "tree" depending on the form in which the data are available.

TABLE 13.23

MISSION / AREA TREE

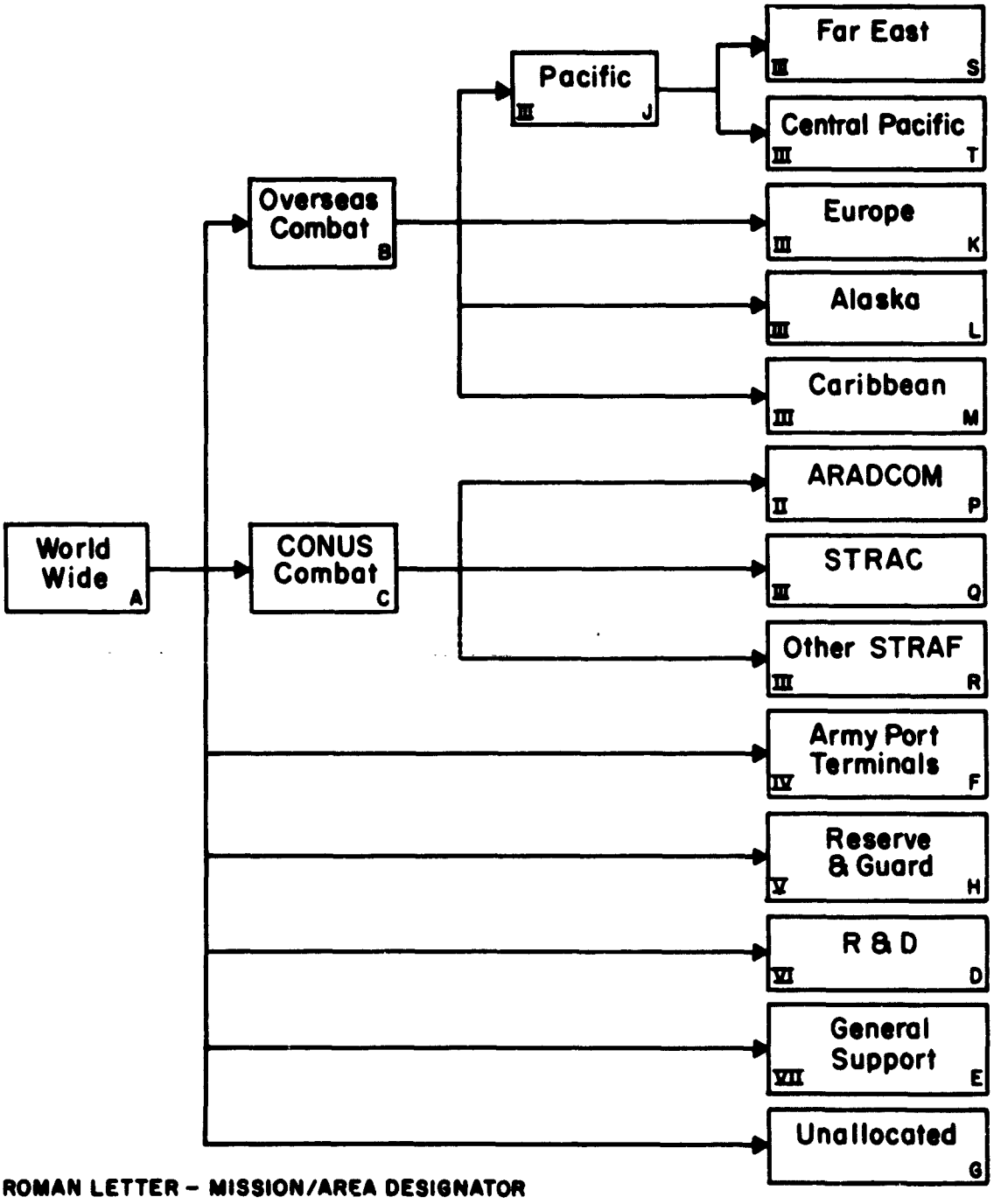

ROMAN LETTER - MISSION/AREA DESIGNATOR
ROMAN NUMERAL - MAJOR PROGRAM

Data should always be entered at the most appropriate level.

Each time a reference to data is required in the model, the tree is "searched" to obtain the data at the most detailed level. The search always begins at the most detailed level and works toward the World-Wide level. If no data are available for a particular level, such as Europe, the model searches for the data at the next most aggregative level, in this case Overseas Combat. This process is continued from one level to the next until data are found.

This concept in operation can be demonstrated readily by the materiel phasing schedule shown on Input Sheet III A in Section 13.1. Howitzers could be authorized for force units in Alaska, mission/area L, but no phasing schedule for this specific mission/area is provided. The model first looks for the specific data needed (in this case a phasing schedule for howitzers for mission/area L). If the desired data for mission/area L are not available, the model looks for the needed data at the next summary level. If a phasing schedule were provided for mission/area B, "Overseas Combat," this schedule would be used for Alaska in the absence of an "Alaska" schedule. Lacking the requisite data at the intermediate summary level ("Overseas Combat"), the model will use the data supplied for "World-Wide" use. The World-Wide phasing schedule for the Howitzer T195E1 and substitutes is shown on the sample Input Sheet III A as follows:

	N-1	N	N+1	N+2	N+3
Standard A	0.0	0.0	0.0	0.2	1.0
Standard B	1.0	1.0	1.0	0.8	0.0

Thus, any alternative force for which materiel item 30215 (the generic data code for this howitzer item) is specified in Alaska (mission/area L) will receive 100% of the Standard B item in years N-1, N, and N+1; 20% of the Standard A (code 31215) and 80% of the Standard B item in year N+2; while in year N+3 and later years the asset position will be 100% of the Standard A.

The mission/area tree presented in this section applies throughout the model. Each major force unit is costed in accordance with the factors prescribed for its mission/area, and if no factors are prescribed for the specific mission/area the model will "search" along the line of aggregation until the needed data are located.

13.7.2 Selection of Proper Input Level

The Army Cost Model is designed with sufficient flexibility to permit a choice among several alternatives in entering new data. This manual cannot describe every possible choice, but the most common kinds of choices are mentioned in this section.

Section 13.7.1 describes the mission/area concept which is incorporated into the model. The operator can use the mission/area tree to save clerical effort and to accomplish the specific changes he desires.

If data are available to indicate that two mission/areas (for example, Alaska and Caribbean) are subject to special circumstances, but that all others can be treated alike, then one World-Wide factor can be entered along with the factor (or factors) for each of the two specific

mission/areas. The operator should specifically decide about the appropriate mission/area designation for the following data:

	Input Sheet
Basic Force Unit Data	II
Materiel Phasing Schedules	III A
Materiel Data	III B
Military Personnel Data	III D
Unspecified Personnel Allocation Ratios	III E
Force & Run Constants	IV A, B

In preparing input data for the model, the following rule must be followed at all times:

> When any new input is to be entered, the operator must supply data for all inputs on the applicable fixed-form input sheet, except inputs of value 1.0 or 0.0 to be automatically supplied by the computer program (see Section 13.2.3).

This rule applies only to the entry of new data not previously included in the model inputs; it does not apply to changes to existing data. Used in this sense, the term "new" data is defined as data with a new ID - mission/area combination (columns 1-5 and column 6). For example, if materiel data for item X are now included in the model for mission areas A, K, and J, the addition of materiel data for item X in mission/area M constitutes new data. Changing a particular factor (e.g., maintenance float) for item X in mission/area K does not constitute new data.

The rule must be followed regardless of what type of input sheet is used to enter the data, whether fixed form Input Sheets I through IV C, Program Add/Change Sheet V A, or the "free form" sheet. If the fixed form input sheet is used, it must be filled in completely. If another input sheet is used (V A or the free form), the same data must be supplied as would have been entered on the fixed form.

The foregoing rule must be observed because the computer program automatically generates certain types of input data (see Army Cost Model Structure and Flow (4) for a more detailed explanation). When one of the factors on an input sheet is supplied, the model will use the values, including those generated automatically, for that input sheet rather than values applicable to a mission/area at a higher summary level.

To illustrate, assume that the fixed form Input Sheet III B has been used to supply the following World-Wide (M/A A) factors for the T195E1 Howitzer:

Allowance for Unspecified Units	50% of specified
Combat Consumption Rate	4% per month
Maintenance Float Factor	5% of operational inventory

Assuming further that one aspect of an alternative force is the specification of a different allowance for unspecified units for this howitzer in one specific mission/area, for example, 60% in Europe, one might suppose that the data could be entered simply as follows:

ID					M/A	Data Code					F	N-1					N					
01	02	03	04	05	06	07	08	09	10	11	12	13	14	15	16	17	18	19	20	21	22	23
3	1	2	1	5	K	0	0	0	2	3	5	0	6	0	0	0						

Entry of the new factor in this manner, however, would be equivalent to specifying for the T195E1 Howitzer, in Europe, all of the following:

Allowance for Upspecified Units	60%
Combat Consumption	Zero
Maintenance Float	Zero

The resulting calculated requirements for Europe would, of course, be seriously in error. To make the desired change properly the operator should prepare a complete Input Sheet III B, rather than prepare only a single entry as in the above example.

APPENDIX

GLOSSARY

Adjustment Factor - Cost model inputs used to make changes to all inputs of a specified type.

Base Case - The benchmark force used as a point of departure and a comparison standard in costing alternative forces using the model. The model run of the currently approved base program will normally be used as the model base case.

Basic Force Unit - Component units of major force units. The make-up of each major force unit is specified in terms of basic force units. The makeup of each basic force unit, in turn, is specified in terms of personnel and materiel.

Combat Consumption Stock Level - Reserves for replacement of items consumed during the early days of combat (see Section 7.2 of this manual).

Data Code - The five digit number used in the input data coding system to identify the characteristic of the thing identified by the ID number. The data code is punched into columns 7-11 of the punched card (see Chapter 13).

Delivery-Basis Cost - The cost of a weapon system. materiel item, or force unit, at the time of acceptance. This is distinguished from the time of funding or expenditure (see "Total Obligational Authority").

Force Unit - See "Major Force Unit" and "Basic Force Unit."

Format Code - The symbol used as part of the input data coding system to identify the dimensions of the input data, e.g., units, thousands, etc. (see Section 13.2).

Identification Number - The five digit number used in the input data coding system to identify the thing (force unit, materiel item, etc.) to which the data apply. The identification number is punched into columns 1-5 of the punched card (see Chapter 13).

ID Number - See "Identification Number."

Inheritance - The obtaining of resources by one force unit from another unit which had resources in excess of its requirements. The allocation rules used in the model for inheritance are mentioned in Section 13.7 of this manual. Also see Army Cost Model Structure and Flow.[4]

Input Data - Specific values entered for the generalized parameters in the model structure.

Input Listing - A machine listing of all items of input data used in the model. Two types are available: Standard Input Listings and Inverse Input Listings (see Chapter 13 for descriptions and uses).

Inverse Listing - See "Inverse Input Listing."

Inverse Input Listing - One of two types of input listings (see Chapter 13 for description and use).

Lag Factors - Factors used in the model to translate delivery-basis cost into Total Obligational Authority.

Major Force Unit - A unit which may be of significance in analysis, itself defined specifically in terms of basic force units and, in special cases, manpower, materiel, and other elements of cost. The major force unit is the lowest level at which outputs are available from the model.

Manning Level - The relationship between the number of men in specified force being costed and the number in some previously selected benchmark, e.g., TOE or "authorized strength (see Section 8.3 of this manual).

Mission/Area - Major geographical areas, such as Europe, Pacific, etc., or missions, such as Research and Development, Reserve & Guard, etc.

Mission Area Code - The symbol used as part of the input data coding system to identify the applicable mission/area (see Chapter 13).

Model - Any generalized framework for solving problems. As used in this manual, the term "model" refers to the Army Cost Model and is defined as the generalized structure, estimating methodology, and logic. "Model" is not used to include input data (see Sections 1.3 and 2.1)

Model Run - A particular application of the Army Cost Model to estimate the cost of a particular force.

Operator - A member of the staff of analysts responsible for operating and maintaining the model and input data (see Section 1.2 of this manual for a description of the functions of the model operator)

Phasing Schedule - Model inputs which represent the timing of the introduction of specific equipment items into the force. The phasing

schedule indicates also any differences in priorities by mission/area (see Section 7.4 of this manual).

Progress Curve - Materiel cost-quantity relationship which can be used to estimate unit costs (see Sub-section 7.3.2 of this manual).

Run - See "Model Run."

Standard Input Listing - One of two types of Input Listings (see Chapter 13 for description and use).

Thruput - A special input, usually in terms of dollars or personnel strengths, which is not operated upon in the model computational procedure and which appears in the model output exactly as entered. Thruputs are always entered at the MFU level. They may be added to like quantities in making output aggregations.

Update Listing - A machine listing of changes to the model input data. An Update Listing is made each time an alternative force is run or the base case updated (see Section 13.5.5).

Updating - Incorporation of current data to keep existing model inputs up to date, and to extend the coverage of the model to include new weapon systems, organizational units, or hardware items as they are introduced into the force (see Chapter 11 for a discussion of updating).

Upgrading - Research to modify the structure of the model or to incorporate new forms of input data.

User - The individual, group, or organization by whom the model is used to develop cost estimates, i.e., the user of model outputs.

REFERENCES

1. Grosse, R. N., Army Cost Model, The RAND Corporation, Research Memorandum RM-3446-ASDC, December, 1962.

2. Meltsner, A. J. and R. A. Martyn, Army Cost Model Data: Part 1, Sources and Analysis, The RAND Corporation, Research Memorandum RM-____ (to be published).

3. Department of the Army, Five-Year Force Structure and Financial Program, FY 1962-1967; consists of:

   Program Summaries, Programs II - VII (published in separate volumes), 15 June, 1 October 1962 (Secret).

   Materiel Annex (published in two sections):

   Part I, PEMA Procurement List, 15 August, 1 October 1962 (Secret).

   Part II, PEMA Equipment Data Sheets, 1 October 1962 (Secret Restricted Data).

4. String, J. Jr., Army Cost Model Structure and Flow, The RAND Corporation, RM-____ (to be published).